Farrand Generator

发电机专业制造商

Professional Alternator Manufacturer

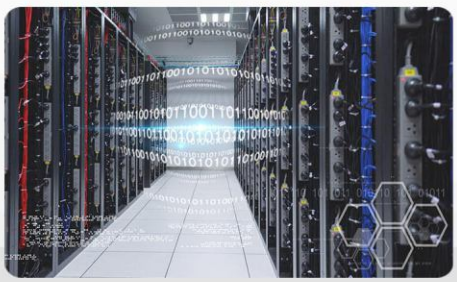

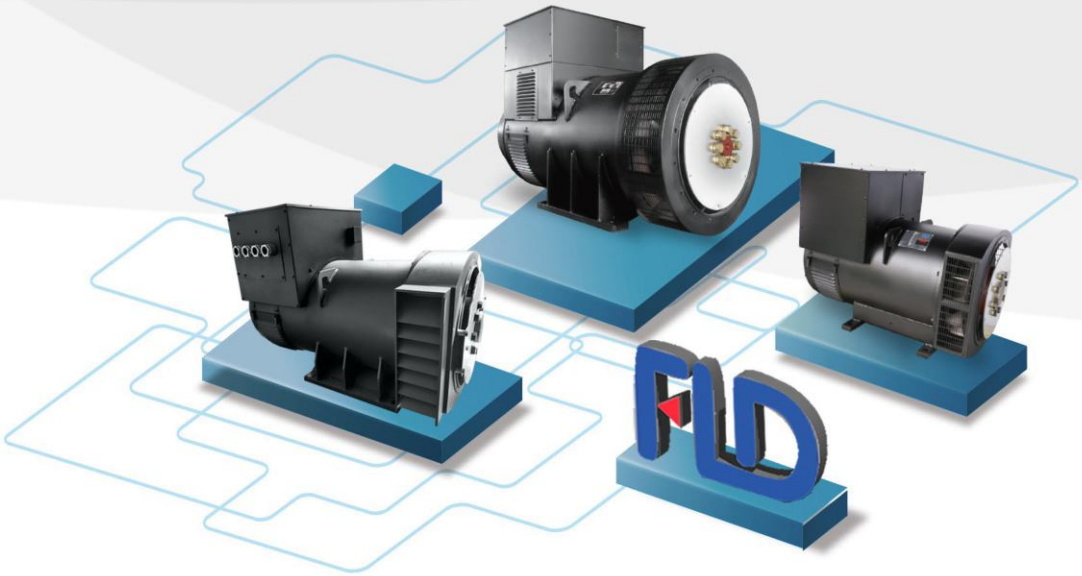

江苏法兰德电机科技有限公司

Jiangsu Farrand Generator Technology Co.,Ltd

ALTERNATOR

EXPANDED DIAGRAM

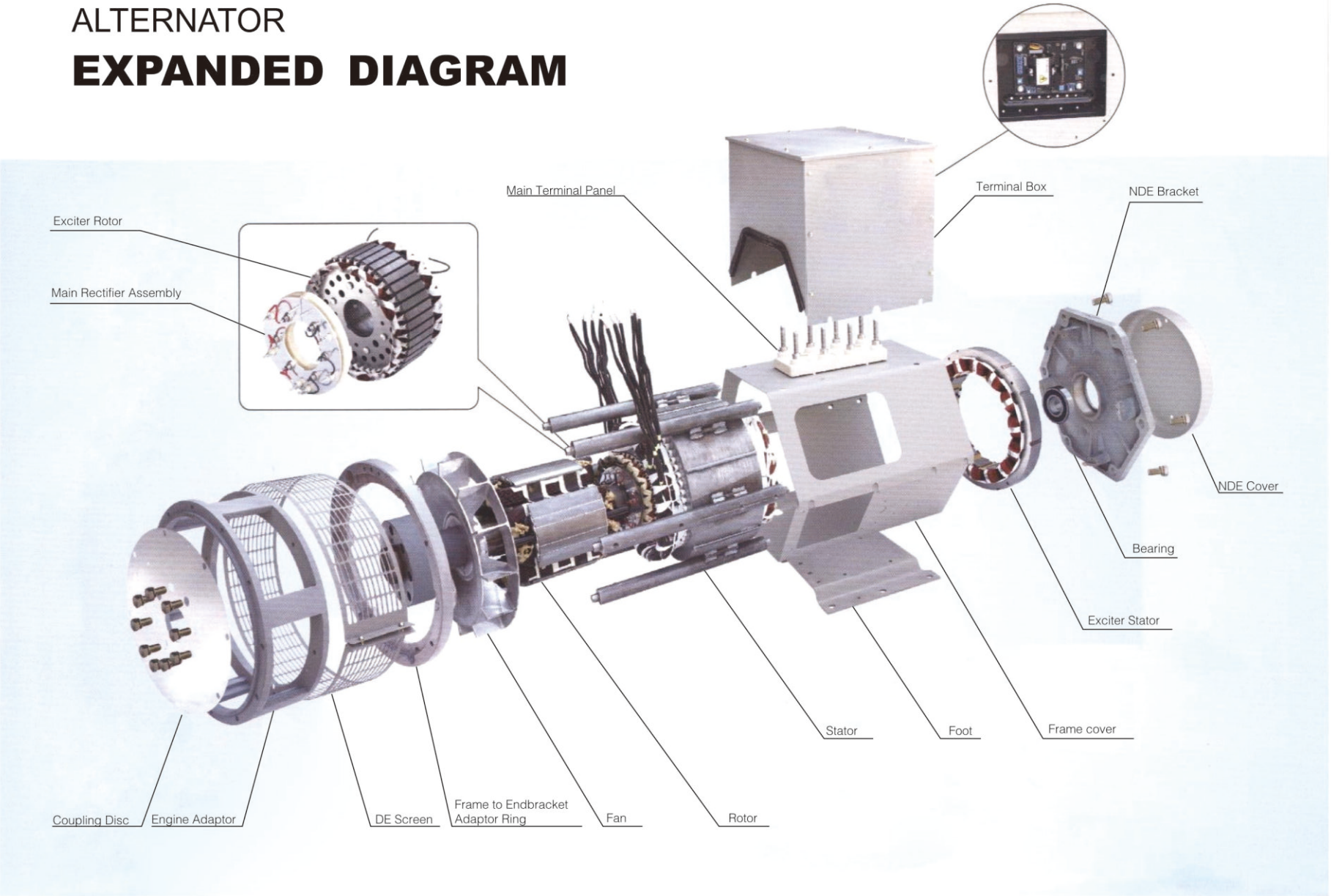

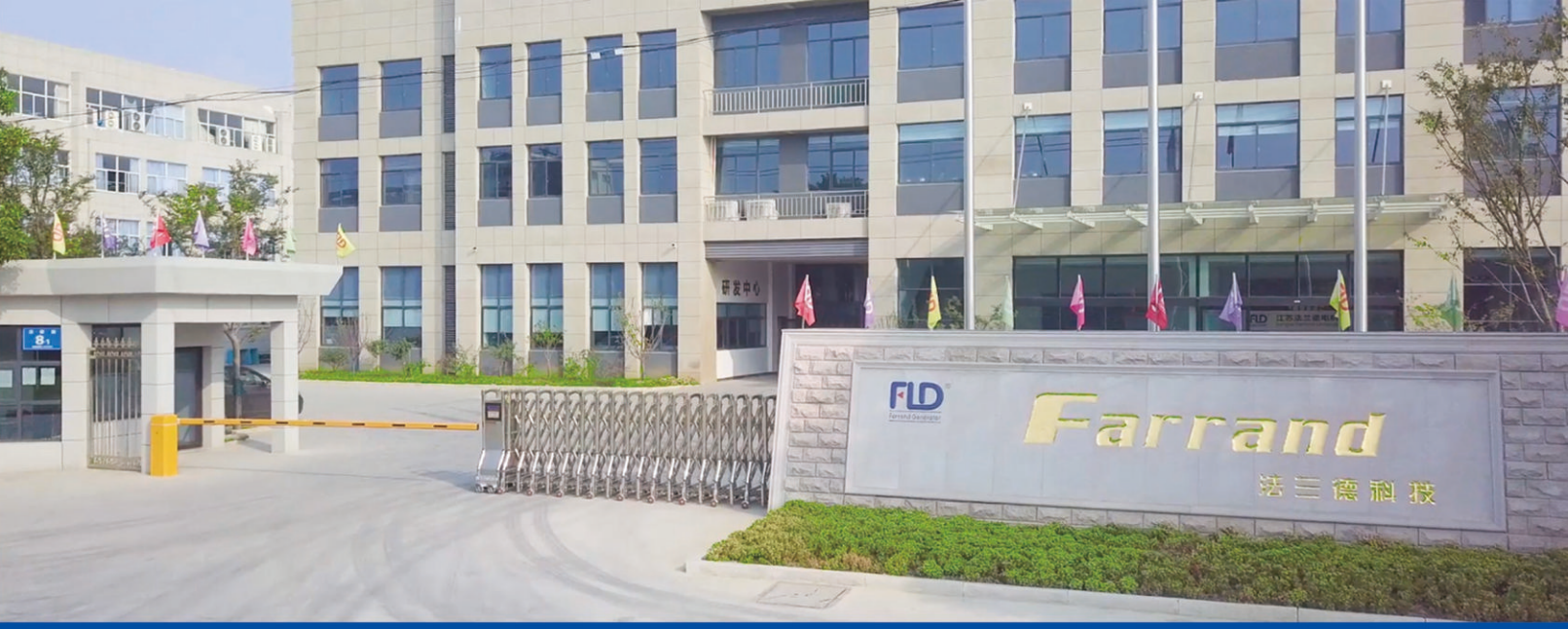

COMPANY PROFILE

Farrand Generator,as a high-tech enterprise，was founded in 2009 in Wuxi city，Jiangsu province,is a comprehensive enterprise specialized in the R&D、design、production、sales and service of generators.

Products are widely used in military industry, nuclear power, shipbuilding, aviation, oil field, railway, power engineering, telecommunication and other fields.It is an excellent partner of many power equipment manufacturers such as world-renowned generator set companies, ship power equipment companies, oil and gas field power equipment companies, locomotive electrical equipment companies, communication power equipment companies, construction machinery power equipment companies and many other power equipment manufacturers.

Since the establishment of the company, with its own core technology of generator, independent raw material supply chain and large-scale manufacturing platform, Farrand generator can provide product、service and technical support worldwide. The FLD series product range covers high-speed, medium-Low-speed,

high-voltage, medium-low-voltage generators, etc., and can service strategic partners with high-quality customized products.

Low voltage alternator power range: 5KW-2500KW

High voltage alternator power range: 500KW-2800KW

Medium speed alternator power range:240KW-1200KW

Be honest, be loyal, be cooperative,we hope to work with you in future.

Farrand Generator

ENTERPRISE QUALIFICATION 企业资质

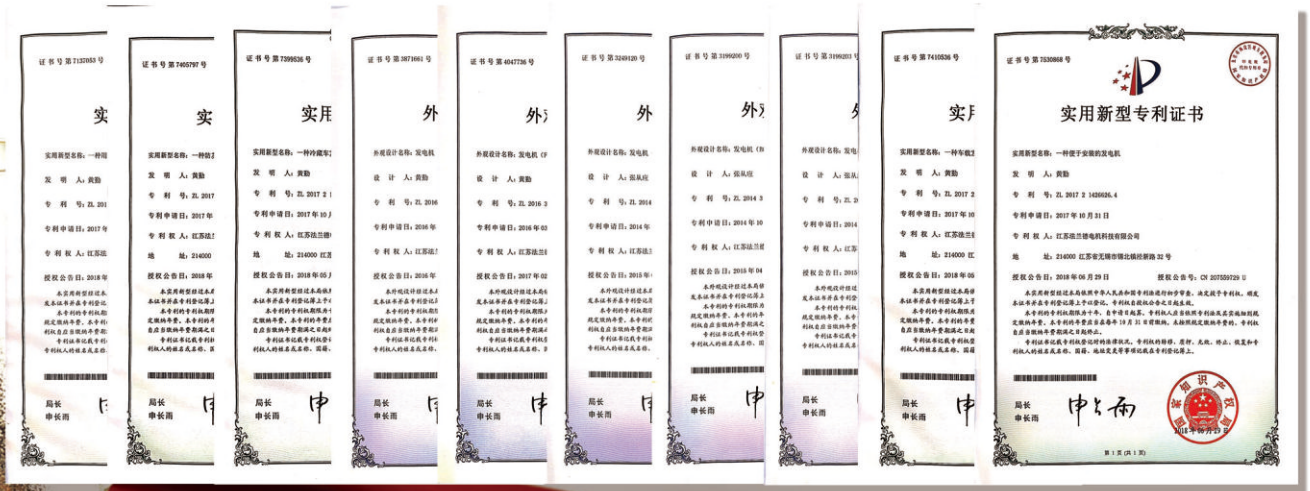

车间岗位展示 / WORKSHOP DISPLAY

PROCESS INSPECTION

TEST CENTRE

TEST INSTRUMENT

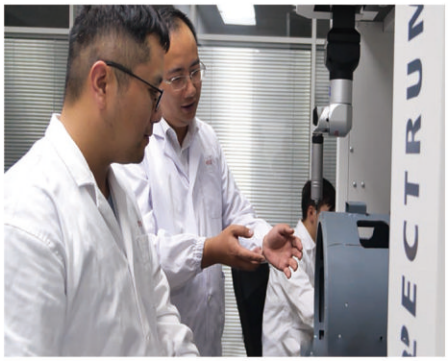

CMM

ROTOR BALANCE

VACUUM DIPPING PAINT

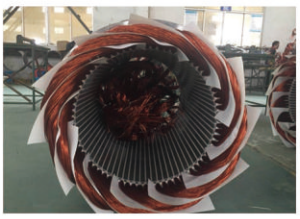

INSERT WINDING

原材料展示 / MAIN MATERIALS DISPLAY

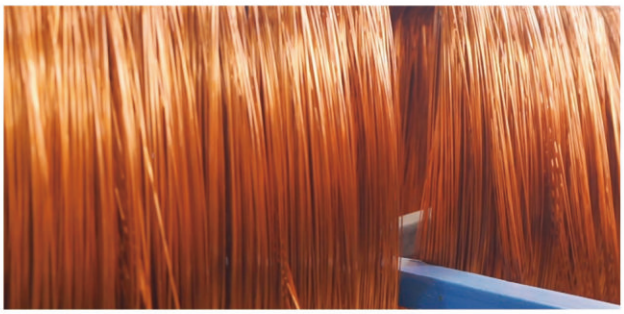

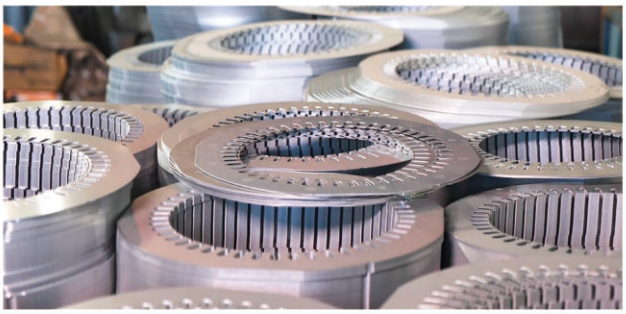

APPLICATION CASES 应用案例

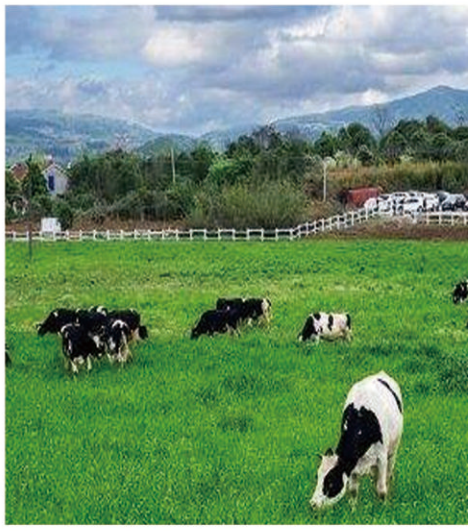

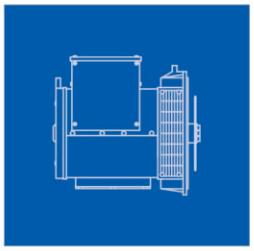

Farm

Building

Hospital

Sea Port

Oil&Gas Field

DC

School

产品介绍 PRODUCT PROFILE

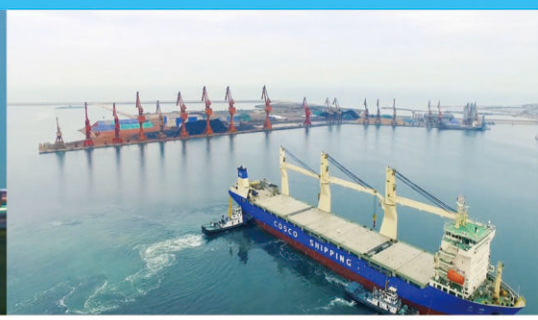

Voltage regulation factor

Voltage regulation factor refers to voltage change from no load to full load wen the engine speed fluctuates within 4% and the power factor is limited to 0.8%-1(including change from cold state to hot state).Voltage can be adjusted through fine adjustment of AVR.

Insulation Class is“H”

All winding components are made from special materials using special vacuum paint dipping process and they ensure generator operation in severe environments. Special resin matrix materials enabled high machining strength and high mechanical strength of coils and rotating members.

Windings And Electrical Performance

All generator stators are wound to 2/3 pitch,this is eliminates triple(3rd,9th,15th..) harmoics on the voltage waveform and is an optimum designed for UPS equipment of non linear loads.The 2/3 pitch design avoids excessive neutral currents result from higher winding pitch-es.A fully consecutive damper winding reduces oscillations during paralleling.The 2/3 pitch windings are carefully selected pole and tooth ensures very low waveform distortion.

Telephone Interference

THF(BS EN60034-1)<2%

TIF(NEMA MG1-22) <50

Radio Interference

Brushless device and high quality AVR ensure very low radio interference.

We can provide extra RFI if you need.

Terminals and Terminal Box

Standard Generators are 3 phase,and you can reconnect 12 ends of the terminals,which are mounted on a terminals block at the non-drive end of the generator.A sheet steel terminalbox with AVR is provided with enough space for the customer's wiring.It has removablepanels for easy operation.

Engine adaptor and couping

All generators are designed in single bearing and double bearings.The adaptor and the drive plate are international standard.It can connect with all kinds of diesel engine with standard SAE.

IP CLASS

All generator IP class are IP22,and IP23 is optional.

Product Model Definition

FLD		18	4	E	1
FLD	M	27	4	C	2

- MODEL
- INDUSTRIAL/MARINE
- SERIES NO.
- NO.OF POLES
- CORE LENGTH
- NO. OF BEARING

FLD 162/FLD 164

Standard Features:

- Meets the world's leading generator standard requirements GB755, IEC60034, BS5000, VDE0530, CSA22.2-100
- Single and double fulcrums are optional, single fulcrum can be se lected for various specifications of transition sleeves and easy to install.
- 12 Stator leads can be reconnect to meet different voltage require ments.
- Standard H insulation class.
- Standard 2/3 pitch winding.
- Fully sealed and maintenance-free bearings

Optional Parts:

- Winding temperature test RTD
- Winding Temperature Protection Thermistors & Relays
- Anti-condensation heater
- Air filter
- Parallel operation of the droop
- Current transformer
- Auxiliary winding excitation system

FLD162 SERIES		Three-phase H class temperature rise 125° C								Single-phase H class temperature rise 125° C					
VOLTAGE		50Hz/3000Rpm				60Hz/3600Rpm				50Hz/3000Rpm			60Hz/3600Rpm		
STAR(Y)-SERIES		380	400	415	440	416	440	460	480	220	230	240	220	230	240
STAR(Y)-PARALLEL		190	200	208	220	208	220	230	240	110	115	120	110	115	120
DELTA(△)-SERIES		220	230	240	254	240	254	266	277	N/A	N/A	N/A	N/A	N/A	N/A
FLD162D	Rated capacity (KVA)	12.5	12.5	12.5	12.0	14.7	15.6	15.6	15.6	8.4	8.4	8.4	10	10	10
	Rated Power (KW)	10.0	10.0	10.0	9.6	11.8	12.5	12.5	12.5	6.7	6.7	6.7	8	8	8
	Efficiency (%)	72.4	73.3	74.0	75.0	71.4	71.9	72.8	73.5	67.3	67.9	68.4	64.5	65.3	66
FLD162E	Rated capacity (KVA)	15.0	15.0	15.0	14.5	17.8	18.8	18.8	18.8	10.0	10.0	10.0	12.4	12.4	12.4
	Rated Power (KW)	12.0	12.0	12.0	11.6	14.2	15.0	15.0	15.0	8.0	8.0	8.0	9.9	9.9	9.9
	Efficiency (%)	76.3	77.0	77.5	78.2	75.1	75.8	76.5	77.0	71.2	71.7	72	68.8	69.5	70.1
FLD162F	Rated capacity (KVA)	17.5	17.5	17.5	16.5	20.8	21.9	21.9	21.9	11.8	11.8	11.8	14.4	14.4	14.4
	Rated Power (KW)	14.0	14.0	14.0	13.2	16.6	17.5	17.5	17.5	9.4	9.4	9.4	11.5	11.5	11.5
	Efficiency (%)	78.5	79.1	79.6	80.2	77.4	78.1	78.7	79.2	73.6	74	74.3	71.4	72.1	72.6
FLD162G	Rated capacity (KVA)	25.0	25.0	25.0	22.5	29.6	31.3	31.3	31.3	16.8	16.8	16.8	20.6	20.6	20.6
	Rated Power (KW)	20.0	20.0	20.0	18.0	23.7	25.0	25.0	25.0	13.4	13.4	13.4	16.5	16.5	16.5
	Efficiency (%)	80.7	81.4	81.9	82.6	80.6	81.0	81.2	81.7	76.7	77.1	77.4	74.7	75.3	75.8

FLD164 SERIES		Three-phase H class temperature rise 125° C								Single-phase H class temperature rise 125° C					
VOLTAGE		50Hz/1500Rpm				60Hz/1800Rpm				50Hz/1500Rpm			60Hz/1800Rpm		
STAR(Y)-SERIES		380	400	415	440	416	440	460	480	220	230	240	220	230	240
STAR(Y)-PARALLEL		190	200	208	220	208	220	230	240	110	115	120	110	115	120
DELTA(△)-SERIES		220	230	240	254	240	254	266	277	N/A	N/A	N/A	N/A	N/A	N/A
FLD164A	Rated capacity (KVA)	8.1	8.1	8.1	6.2	9.6	10.2	10.2	10.2	5.4	5.4	5.4	6.4	6.4	6.4
	Rated Power (KW)	6.5	6.5	6.5	5.0	7.7	8.2	8.2	8.2	4.3	4.3	4.3	5.1	5.1	5.1
	Efficiency (%)	75.6	76.2	76.6	77.1	75.8	76.3	76.9	77.4	69.6	69.6	70	69.7	70.1	70.6
FLD164B	Rated capacity (KVA)	11.0	11.0	11.0	8.5	13.0	13.8	13.8	13.8	7.4	7.4	7.4	8.8	8.8	8.8
	Rated Power (KW)	8.8	8.8	8.8	6.8	10.4	11.0	11.0	11.0	5.9	5.9	5.9	7.0	7.0	7.0
	Efficiency (%)	78.8	79.4	79.8	78.3	79.0	79.4	80.0	80.5	73.6	73.8	73.9	73.3	73.9	74.4
FLD164C	Rated capacity (KVA)	13.5	13.5	13.5	11.0	16.0	16.9	16.9	16.9	9.0	9.0	9.0	10.8	10.8	10.8
	Rated Power (KW)	10.8	10.8	10.8	8.8	12.8	13.5	13.5	13.5	7.2	7.2	7.2	8.6	8.6	8.6
	Efficiency (%)	80.0	80.7	81.0	81.5	80.3	80.7	81.3	81.7	75.2	75.5	75.7	75.0	75.6	76.0
FLD164D	Rated capacity (KVA)	16.0	16.0	16.0	13.5	18.9	20.0	20.0	20.0	10.8	10.8	10.8	13.5	13.5	13.5
	Rated Power (KW)	12.8	12.8	12.8	10.8	15.1	16.0	16.0	16.0	8.6	8.6	8.6	10.8	10.8	10.8
	Efficiency (%)	81.0	81.6	81.9	82.1	81.2	81.7	82.2	82.7	76.5	76.7	76.9	76.4	76.9	77.4

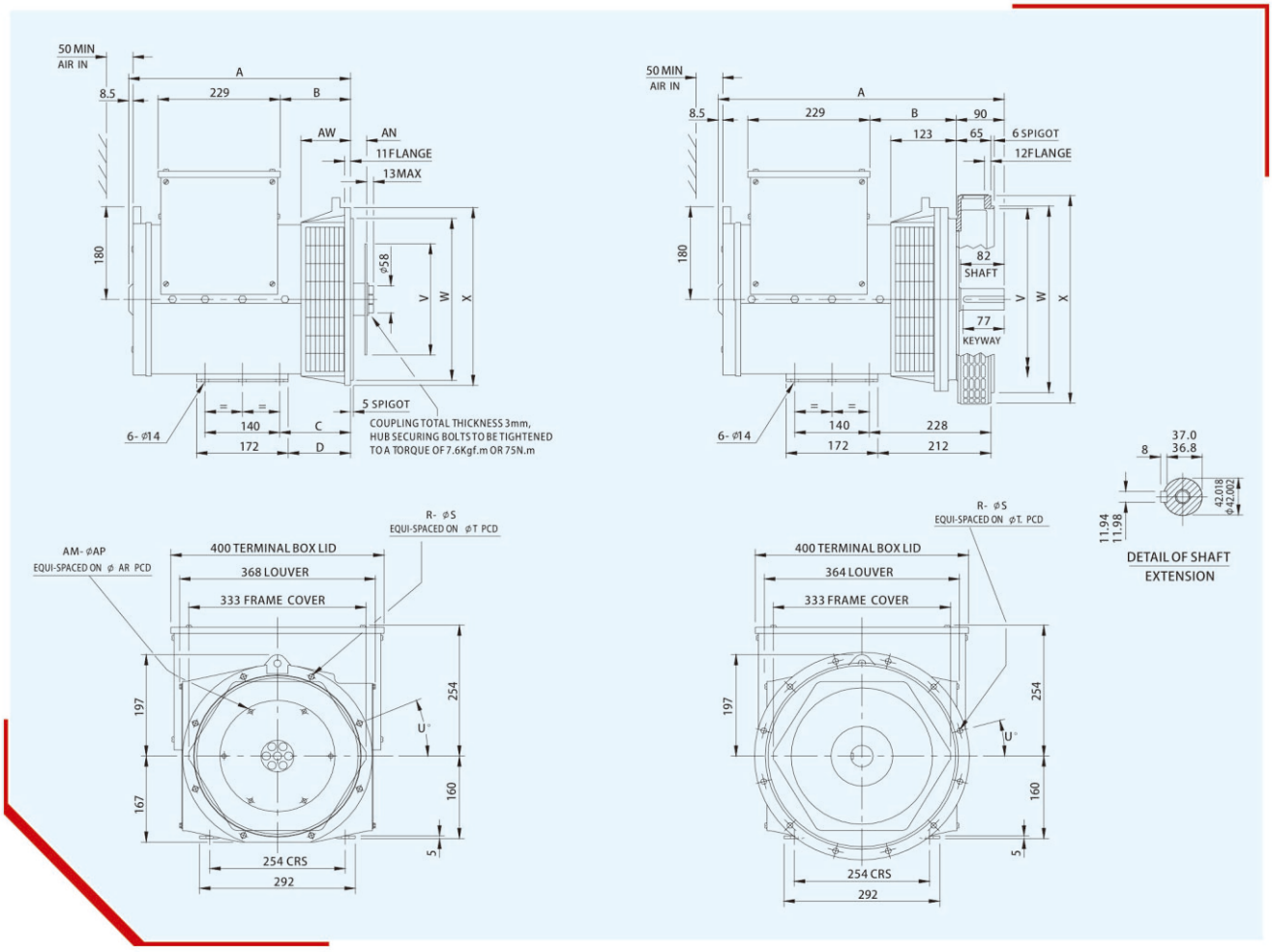

SINGLE BEARING SUPPORTING

DIMENSION			SHIPPING DETAILS		
TYPE	A	B	N.W(kg)	G.W(kg)	PACKING SIZE(cm)
FLD162D	364.5	93	83	93	64x54x72
FLD162E	364.5	93	94	104	64x54x72
FLD162F	416.5	132	101	111	64x54x72
FLD162G	416.5	132	117	127	64x54x72
FLD164A	364.5	93	85	95	64x54x72
FLD164B	364.5	93	90	102	64x54x72
FLD164C	391.5	107	96	110	64x54x72
FLD164D	391.5	107	99	116	64x54x72

COUPLING DISC					
SAE NO.	AN	AM	AP	AR	V
6.5	30.16	6	8.7	200.0	215.8
7.5	30.16	8	8.7	222.2	241.2
8	61.9	6	11	244.5	263.4
10	53.98	8	11	295.3	314.2

FLANGE ADAPTOR									
SAE NO.	AW	R	S	T	U	W	X	C	D
2	132.3	12	11	466.7	15	447.6	489	172	156
3	105	8	11	428.6	15	409.5	451	145	129
4	93	8	11	381.0	15	361.9	402	133	117
5	93	8	11	333.3	22.5	314.3	356	133	117
6	124.7	8	11	285.8	22.5	266.7	308	164.7	148.7

DOUBLE BEARING SUPPORTING

DIMENSION			SHIPPING DETAILS		
TYPE	A	B	N.W(kg)	G.W(kg)	PACKING SIZE(cm)
FLD162D	484.5	123	89	99	64x54x72
FLD162E	484.5	123	100	110	64x54x72
FLD162F	536.5	162	107	117	64x54x72
FLD162G	536.5	162	123	133	64x54x72
FLD164A	484.5	123	91	101	64x54x72
FLD164B	484.5	123	98	108	64x54x72
FLD164C	511.5	137	106	116	64x54x72
FLD164D	511.5	137	112	122	64x54x72

FLANGE ADAPTOR							
SAE NO.	R	S	T	U	V	W	X
2	12	11	466.7	15	432	447.6	495
3	12	11	428.6	15	396	409.5	451
4	12	11	381	15	352	361.9	403
5	8	11	333.3	22.5	301	314.3	356

All drawing and weight data are for reference,please contact Farrand Company if any doubt

FLD 182/FLD 184

Standard Features:

- Meets the world's leading generator standard requirements GB755, IEC60034, BS5000, VDE0530, CSA22.2-100
- Single and double fulcrums are optional, single fulcrum can be se lected for various specifications of transition sleeves and easy to install.
- 12 Stator leads can be reconnect to meet different voltage require ments.
- Standard H insulation class.
- Standard 2/3 pitch winding.
- Fully sealed and maintenance-free bearings

Optional Parts:

- Winding temperature test RTD
- Winding Temperature Protection Thermistors & Relays
- Anti-condensation heater
- Air filter
- Parallel operation of the droop
- Current transformer
- Auxiliary winding excitation system

FLD182 SERIES		Three-phase H class temperature rise 125° C								Single-phase H class temperature rise 125° C					
VOLTAGE		50Hz/3000Rpm				60Hz/3600Rpm				50Hz/3000Rpm			60Hz/3600Rpm		
STAR(Y)-SERIES		380	400	415	440	416	440	460	480	220	230	240	220	230	240
STAR(Y)-PARALLEL		190	200	208	220	208	220	230	240	110	115	120	110	115	120
DELTA(△)-SERIES		220	230	240	254	240	254	266	277	N/A	N/A	N/A	N/A	N/A	N/A
FLD182H	Rated capacity (KVA)	30.0	30.0	30.0	29.0	33.0	35.0	35.0	35.0	20	20	20	24.8	24.8	24.8
	Rated Power (KW)	24.0	24.0	24.0	23.2	26.4	28.0	28.0	28.0	16	16	16	19.8	19.8	19.8
	Efficiency (%)	82.5	83.0	83.3	83.6	81.5	81.9	82.4	82.8	77.2	77.7	78	75.1	75.6	76.2
FLD182J	Rated capacity (KVA)	35.0	35.0	35.0	34.0	37.8	40.0	40.0	40.0	23.5	23.5	23.5	28.9	28.9	28.9
	Rated Power (KW)	28.0	28.0	28.0	27.2	30.2	32.0	32.0	32.0	18.8	18.8	18.8	23.1	23.1	23.1
	Efficiency (%)	83.5	83.8	84.0	84.3	82.6	82.9	83.2	83.5	78.6	79	79.3	76.6	77.3	77.8
FLD182K	Rated capacity (KVA)	37.5	37.5	37.5	36.3	44.4	46.9	46.9	46.9	25	25	25	31	31	31
	Rated Power (KW)	30.0	30.0	30.0	29.0	35.5	37.5	37.5	37.5	20	20	20	24.8	24.8	24.8
	Efficiency (%)	84.8	85.2	85.5	85.8	83.6	84.2	84.6	84.9	80.6	80.7	80.9	78.9	79.4	79.9

FLD184 SERIES		Three-phase H class temperature rise 125° C								Single-phase H class temperature rise 125° C					
VOLTAGE		50Hz/1500Rpm				60Hz/1800Rpm				50Hz/1500Rpm			60Hz/1800Rpm		
STAR(Y)-SERIES		380	400	415	440	416	440	460	480	220	230	240	220	230	240
STAR(Y)-PARALLEL		190	200	208	220	208	220	230	240	110	115	120	110	115	120
DELTA(△)-SERIES		220	230	240	254	240	254	266	277	N/A	N/A	N/A	N/A	N/A	N/A
FLD184E	Rated capacity (KVA)	22.5	22.5	22.5	17.5	27.5	28.8	28.8	30.0	15	15	15	18.4	18.4	18.4
	Rated Power (KW)	18.0	18.0	18.0	14.0	22.0	23.0	23.0	24.0	12	12	12	14.7	14.7	14.7
	Efficiency (%)	84.3	84.9	85.3	85.8	83.8	84.3	84.9	85.2	81.3	81.7	81.9	79.9	80.6	81.1
FLD184F	Rated capacity (KVA)	27.5	27.5	27.5	22.5	32.5	34.4	34.4	35.0	18.5	18.5	18.5	21.9	21.9	21.9
	Rated Power (KW)	22.0	22.0	22.0	18.0	26.0	27.5	27.5	28.0	14.8	14.8	14.8	17.5	17.5	17.5
	Efficiency (%)	85.7	86.2	86.6	87.0	85.6	85.9	86.4	86.7	82.7	83	83.3	87.9	81.9	82.8
FLD184G	Rated capacity (KVA)	31.3	31.3	31.3	27.5	35.0	37.5	37.5	37.5	21	21	21	25	25	25
	Rated Power (KW)	25.0	25.0	25.0	22.0	28.0	30.0	30.0	30.0	16.8	16.8	16.8	20	20	20
	Efficiency (%)	86.6	87.0	87.3	87.6	86.7	87.3	87.6	87.8	83.7	83.9	83.9	83	83.4	83.8
FLD184H	Rated capacity (KVA)	37.5	37.5	37.5	32.5	44.3	46.9	46.9	46.9	25	25	25	31.3	31.3	31.3
	Rated Power (KW)	30.0	30.0	30.0	26.0	35.4	37.5	37.5	37.5	20	20	20	25	25	25
	Efficiency (%)	86.8	87.1	87.4	87.6	86.9	87.2	87.5	87.8	82.7	82.9	83.2	82.9	83.2	83.5
FLD184J	Rated capacity (KVA)	40.0	42.5	40.0	35.0	47.3	50.0	50.0	50.0	28	28	28	35	35	35
	Rated Power (KW)	32.0	34.0	32.0	28.0	37.8	40.0	40.0	40.0	22.4	22.4	22.4	28	28	28
	Efficiency (%)	87.4	87.7	87.9	88.2	87.5	87.8	88.2	88.5	83.2	83.4	83.6	83.4	83.8	84.2

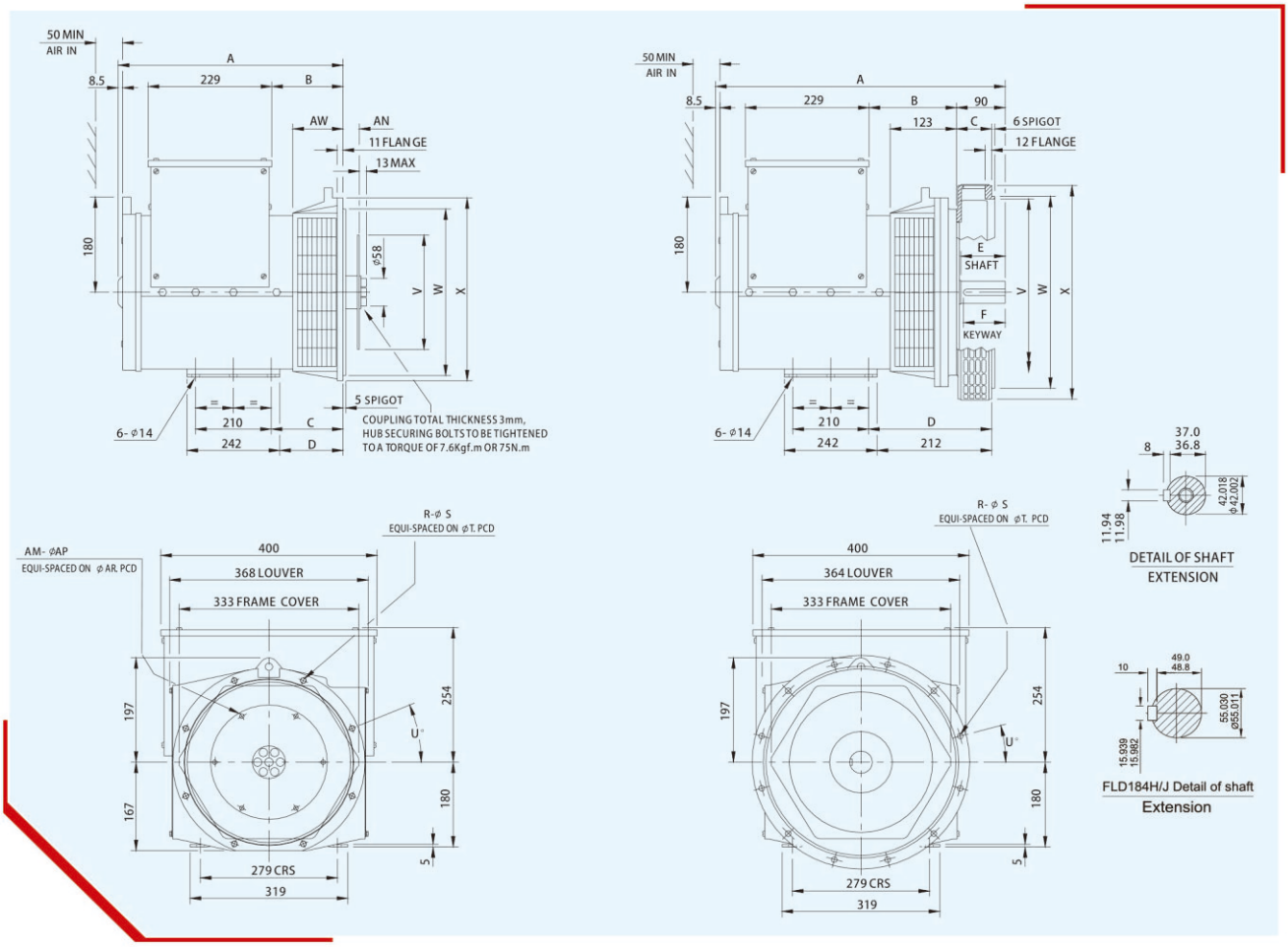

SINGLE BEARING SUPPORTING

DIMENSION			SHIPPING DETAILS		
TYPE	A	B	N.W(kg)	G.W(kg)	PACKING SIZE(cm)
FLD182H	481.5	197	130	140	64x54x72
FLD182J	481.5	197	143	153	64x54x72
FLD182K	521.5	237	159	169	64x54x72
FLD184E	431.5	147	120	133	84x59x75
FLD184F	521.5	237	150	156	84x59x75
FLD184G	521.5	237	156	172	84x59x75
FLD184H	654.5	325	216	226	84x59x75
FLD184J	654.5	325	226	236	84x59x75

COUPLING DISC					
SAE NO.	AN	AM	AP	AR	V
6.5	30.16	6	8.7	200	215.8
7.5	30.16	8	8.7	222.2	241.2
8	61.9	6	11	244.5	263.4
10	53.98	8	11	295.3	314.2
11.5	39.68	8	11	333.4	352.3

FLANGE ADAPTOR									
SAE NO.	AW	R	S	T	U	W	X	C	D
2	132.2	12	11	466.7	15	447.6	489	172	156
3	105	8	11	428.6	15	409.5	451	145	129
4	93	8	11	381.0	15	361.9	402	133	117
5	93	8	11	333.3	22.5	314.3	356	133	117
6	124.7	8	11	285.8	22.5	266.7	308	164.7	148.7

All drawing and weight data are for reference,please contact Farrand Company if any doubt

DOUBLE BEARING SUPPORTING

DIMENSION						
TYPE	A	B	C	D	E	F
FLD182H	601.5	227	65	228	82	77
FLD182J	601.5	227	65	228	82	77
FLD182K	641.5	267	65	228	82	77
FLD184E	551.5	147	65	228	82	77
FLD184F	641.5	237	65	228	82	77
FLD184G	641.5	237	65	228	82	77
FLD184H	736.5	285	105	271	110	100
FLD184J	736.5	285	105	271	110	100

FLANGE ADAPTOR							
SAE NO.	R	S	T	U	V	W	X
2	12	11	466.7	15	432	447.6	495
3	12	11	428.6	15	396	409.5	451
4	12	11	381.0	15	352	361.9	403
5	8	11	333.3	22.5	301	314.3	356

SHIPPING DETAILS			
TYPE	N.W(kg)	G.W(kg)	PACKING SIZE(cm)
FLD182H	137	147	64x54x72
FLD182J	150	160	64x54x72
FLD182K	166	176	64x54x72
FLD184E	131	141	84x59x75
FLD184F	154	164	84x59x75
FLD184G	170	180	84x59x75
FLD184H	220	230	84x59x75
FLD184J	230	240	84x59x75

FLD 224

Standard Features:

- Meets the world's leading generator standard requirements GB755, IEC60034, BS5000, VDE0530, CSA22.2-100
- Single and double fulcrums are optional, single fulcrum can be selected for various specifications of transition sleeves and easy to install.
- 12 Stator leads can be reconnect to meet different voltage re quire ments.
- Standard H insulation class.
- Standard 2/3 pitch winding.
- Fully sealed and maintenance-free bearings

Optional Parts:

- Winding temperature test RTD
- Winding Temperature Protection Thermistors & Relays
- Anti-condensation heater
- Air filter
- Parallel operation of the droop
- current transformer
- Auxiliary winding excitation system.
- PMG excitation system.

FLD224 SERIES		Three-phase H class temperature rise 125° C							Single-phase H class temperature rise 125° C					
VOLTAGE		50Hz/1500Rpm			60Hz/1800Rpm				50Hz/1500Rpm			60Hz/1800Rpm		
STAR(Y)-SERIES		380	400	415	416	440	460	480	220	230	240	220	230	240
STAR(Y)-PARALLEL		190	200	208	208	220	230	240	110	115	120	110	115	120
DELTA(△)-SERIES		220	230	240	240	254	266	277	N/A	N/A	N/A	N/A	N/A	N/A
FLD224C	Rated capacity (KVA)	42.5	42.5	42.5	50.0	52.5	52.5	55.0	28	28	28	37.5	37.5	37.5
	Rated Power (KW)	34.0	34.0	34.0	40.0	42.0	42.0	44.0	22.4	22.4	22.4	30	30	30
	Efficiency (%)	86.6	87.1	87.4	87.0	87.4	87.8	88.0	78.4	78.7	78.9	76.1	76.3	76.5
FLD224D	Rated capacity (KVA)	50.0	50.0	50.0	60.0	62.5	62.5	65.0	35	35	35	44	44	44
	Rated Power (KW)	40.0	40.0	40.0	48.0	50.0	50.0	52.0	28	28	28	35.2	35.2	35.2
	Efficiency (%)	87.7	88.2	88.5	87.9	88.3	88.7	88.9	80.2	80.4	80.7	79.5	79.8	80.1
FLD224E	Rated capacity (KVA)	60.0	60.0	60.0	67.5	72.5	75.0	78.0	40	40	40	50	50	50
	Rated Power (KW)	48.0	48.0	48.0	54.0	58.0	60.0	62.4	32	32	32	40	40	40
	Efficiency (%)	88.3	88.6	88.8	88.7	89.0	89.3	89.5	82.1	82.4	82.6	80.6	80.9	81.3
FLD224F	Rated capacity (KVA)	72.5	72.5	72.5	83.8	87.5	87.5	93.8	50	50	50	60	60	60
	Rated Power (KW)	58.0	58.0	58.0	67.0	70.0	70.0	75.0	40	40	40	48	48	48
	Efficiency (%)	89.6	89.9	90.1	90.0	90.3	90.5	90.6	83.7	84.0	84.2	82.9	83.2	83.4
FLD224G	Rated capacity (KVA)	85.0	85.0	85.0	95.0	100.0	100.0	105.0	60	60	60	70	70	70
	Rated Power (KW)	68.0	68.0	68.0	76.0	80.0	80.0	84.0	48	48	48	56	56	56
	Efficiency (%)	89.8	90.2	90.4	90.5	90.7	90.9	91.1	84.1	84.4	84.7	83.7	84.0	84.3

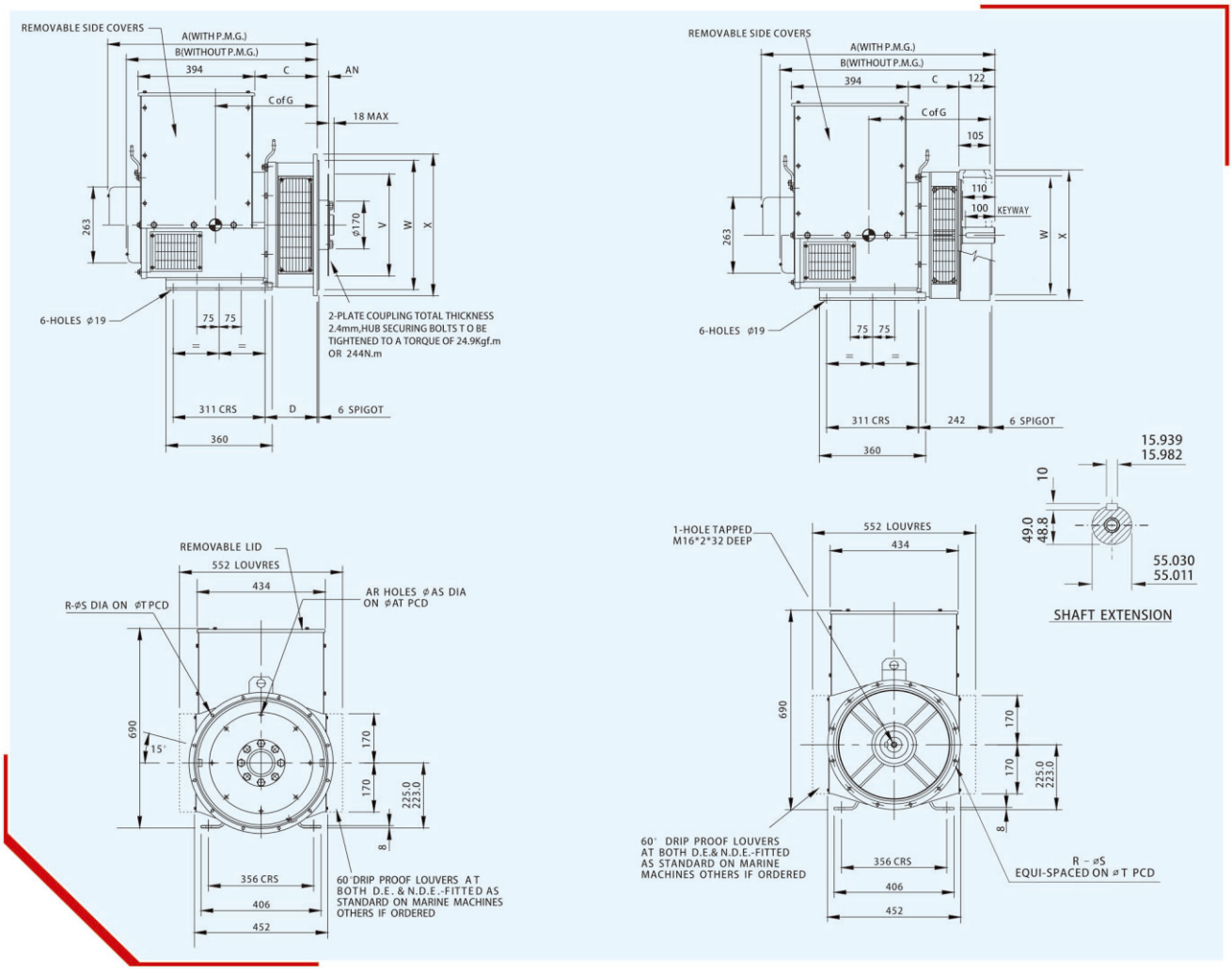

SINGLE BEARING SUPPORTING

DIMENSION					
TYPE		A	B	C	C of G
SAE1	FLD224C	724.3	661.3	224.3	323
	FLD224D	724.3	661.3	224.3	333
	FLD224E	814.3	751.3	314.3	348
	FLD224F	814.3	751.3	314.3	358
	FLD224G	859.3	796.3	359.3	373
SAE2&3	FLD224C	710	647	210	311
	FLD224D	710	647	210	321
	FLD224E	800	737	300	336
	FLD224F	800	737	300	346
	FLD224G	845	782	345	361

COUPLING DISC					
SAE NO.	AN	AR	AS	AT	V
8	61.9	6	11	244.5	263.4
10	53.98	8	11	295.3	314.2
11.5	39.68	8	11	333.3	352.3
14	25.4	8	13.5	438.2	466.6

FLANGE ADAPTOR						
SAE NO.	D	R	S	T	W	X
1	191.3	12	12.7	530.2	511.1	553
2	177	12	11	466.7	447.6	490
3	177	12	11	428.7	409.5	451
4	177	12	11	381	361.9	403

SHIPPING DETAILS			
TYPE	N.W(kg)	G.W(kg)	PACKING SIZE(cm)
FLD224C	235	255	75x55x77
FLD224D	250	270	75x55x77
FLD224E	270	290	84x55x77
FLD224F	310	330	84x55x77
FLD224G	350	370	88x55x77

DOUBLE BEARING SUPPORTING

DIMENSION				
TYPE	A	B	C	C of G
FLD224C	792	729	170	368
FLD224D	792	729	170	378
FLD224E	882	819	260	393
FLD224F	882	819	260	403
FLD224G	927	864	305	418

FLANGE ADAPTOR					
SAE NO.	R	S	T	W	X
1	12	12.7	530.2	511.1	553
2	12	11	466.7	447.6	490
3	12	11	428.7	409.5	451
4	12	11	381.0	361.9	403
5	8	11	333.3	314.3	356

SHIPPING DETAILS			
TYPE	N.W(kg)	G.W(kg)	PACKING SIZE(cm)
FLD224C	255	275	84x55x77
FLD224D	270	295	84x55x77
FLD224E	290	315	94x55x77
FLD224F	330	345	94x55x77
FLD224G	360	385	98x55x77

All drawing and weight data are for reference,please contact Farrand Company if any doubt

FLD 274

Standard Features:

- Meets the world's leading generator standard requirements GB755, IEC60034, BS5000, VDE0530, CSA22.2-100
- Single and double fulcrums are optional, single fulcrum can be selected for various specifications of transition sleeves and easy to install.
- 12 Stator leads can be reconnect to meet different voltage re quire ments.
- Standard H insulation class.
- Standard 2/3 pitch winding.
- Fully sealed and maintenance-free bearings

Optional Parts:

- Winding temperature test RTD
- Winding Temperature Protection Thermistors & Relays
- Anti-condensation heater
- Air filter
- Parallel operation of the droop
- current transformer
- Auxiliary winding excitation system.
- PMG excitation system.

FLD274 SERIES		Three-phase H class temperature rise 125° C						
VOLTAGE		50Hz/1500Rpm			60Hz/1800Rpm			
STAR(Y)-SERIES		380	400	415	416	440	460	480
STAR(Y)-PARALLEL		190	200	208	208	220	230	240
DELTA(△)-SERIES		220	230	240	240	254	266	277
FLD274C	Rated capacity (KVA)	100.0	100.0	100.0	112.5	117.5	117.5	125.0
	Rated Power (KW)	80.0	80.0	80.0	90.0	94.0	94.0	100.0
	Efficiency (%)	89.8	90.3	90.6	90.2	90.5	90.8	91.0
FLD274D	Rated capacity (KVA)	114.0	114.0	114.0	131.3	137.5	137.5	146.3
	Rated Power (KW)	91.2	91.2	91.2	105.0	110.0	110.0	117.0
	Efficiency (%)	90.3	90.6	91.0	90.4	90.7	91.1	91.2
FLD274E	Rated capacity (KVA)	140.0	140.0	140.0	160.0	167.5	167.5	178.8
	Rated Power (KW)	112.0	112.0	112.0	128.0	134.0	134.0	143.0
	Efficiency (%)	91.3	91.7	92.0	91.4	91.7	92.1	92.1
FLD274F	Rated capacity (KVA)	160.0	160.0	160.0	181.3	190.0	190.0	206.0
	Rated Power (KW)	128.0	128.0	128.0	145.0	152.0	152.0	164.8
	Efficiency (%)	92.0	92.3	92.5	92.1	92.4	92.7	92.7
FLD274G	Rated capacity (KVA)	175.0	175.0	175.0	205.0	212.5	212.5	225.0
	Rated Power (KW)	140.0	140.0	140.0	164.0	170.0	170.0	180.0
	Efficiency (%)	92.2	92.5	92.6	92.2	92.4	92.7	92.7
FLD274H	Rated capacity (KVA)	200.0	200.0	200.0	237.5	245.0	245.0	255.0
	Rated Power (KW)	160.0	160.0	160.0	190.0	196.0	196.0	204.0
	Efficiency (%)	92.9	93.1	93.2	92.6	92.7	92.8	92.8

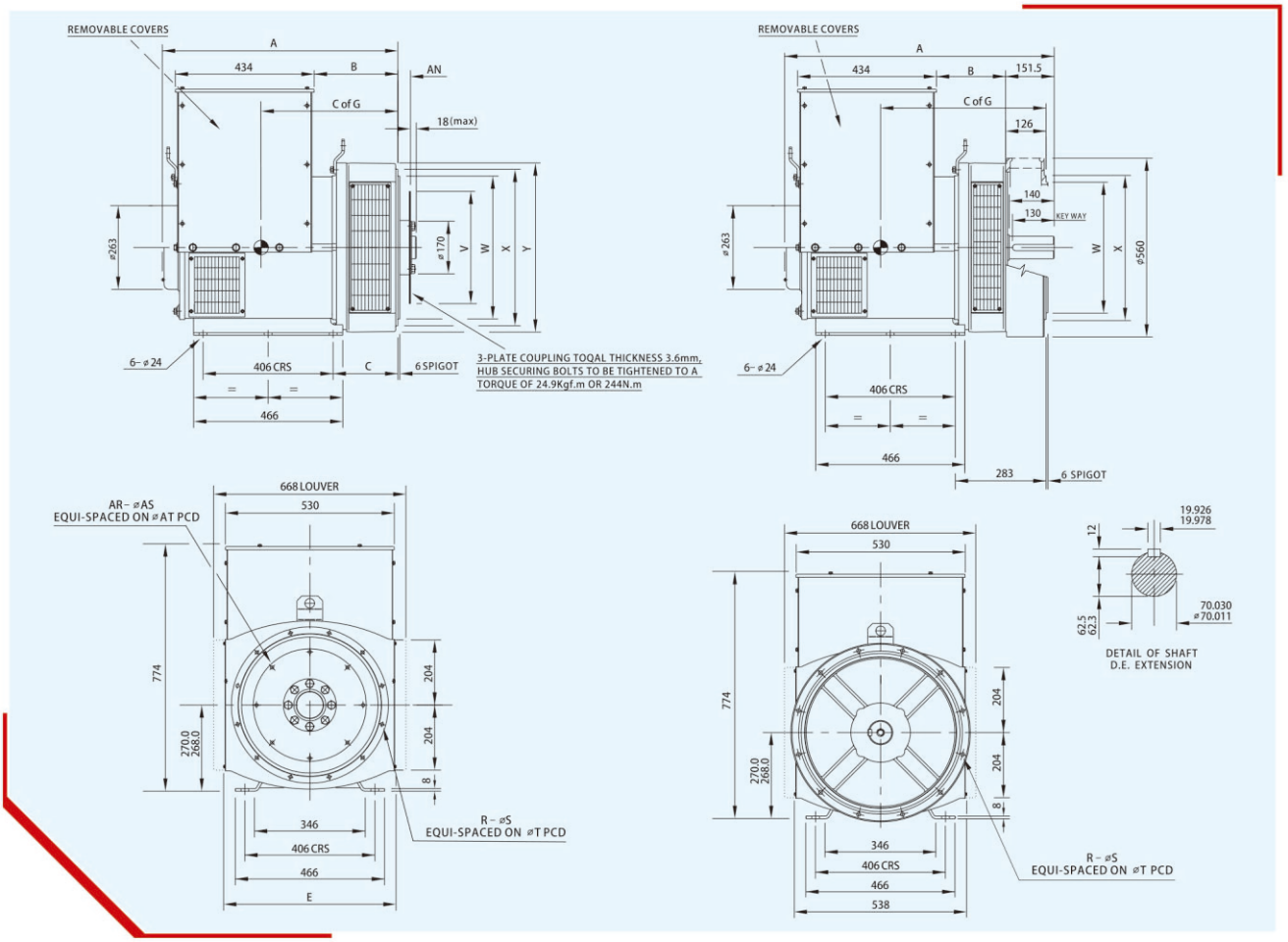

SINGLE BEARING SUPPORTING

DIMENSION					
TYPE		A	B	E	C OF G
SAE1	FLD274C	750.3	274.3	554	365
	FLD274D	750.3	274.3	554	375
	FLD274E	865.3	389.3	554	390
	FLD274F	865.3	389.3	554	415
	FLD274G	915.3	439.3	554	435
	FLD274H	955.3	479.3	554	455
SAE2&3	FLD274C	736	260	554	398
	FLD274D	736	260	554	422
	FLD274E	851	375	554	489
	FLD274F	851	375	554	527
	FLD274G	904	425	554	579
	FLD274H	941	465	554	625

COUPLING DISC					
SAE NO.	AN	AR	AS	AT	V
10	53.98	8	11	295.3	314.2
11.5	39.68	8	11	333.3	352.3
14	25.4	8	13.5	438.2	466.6

FLANGE ADAPTOR							
SAE NO.	C	R	S	T	W	X	Y
1	216.3	12	12.7	530.2	511.1	553	580
2	202	12	11	466.7	447.6	490	530
3	202	12	11	428.6	409.5	451	530

SHIPPING DETAILS			
TYPE	N.W(kg)	G.W(kg)	PACKING SIZE(cm)
FLD274C	385	415	85x60x100
FLD274D	405	435	85x60x100
FLD274E	455	485	100X60X100
FLD274F	500	530	100X60X100
FLD274G	550	580	100X60X100
FLD274H	600	630	100X60X100

DOUBLE BEARING SUPPORTING

DIMENSION			
TYPE	A	B	C of G
FLD274C	842	215	420
FLD274D	842	215	430
FLD274E	957	330	445
FLD274F	957	330	475
FLD274G	1007	380	490
FLD274H	1047	420	510

FLANGE ADAPTOR					
SAE NO.	R	S	T	W	X
1	12	12.7	530.2	511.1	553
2	12	11	466.7	447.6	490
3	12	11	428.6	409.5	451

SHIPPING DETAILS			
TYPE	N.W(kg)	G.W(kg)	PACKING SIZE(cm)
FLD274C	395	435	95X60X100
FLD274D	420	460	95X60X100
FLD274E	470	510	110X60X100
FLD274F	510	550	110X60X100
FLD274G	560	600	110X60X100
FLD274H	610	650	120X60X100

All drawing and weight data are for reference,please contact Farrand Company if any doubt

FLD274J-K

Standard Features:

- Meets the world's leading generator standard requirements GB755, IEC60034, BS5000, VDE0530, CSA22.2-100
- Single and double fulcrums are optional, single fulcrum can be selected for various specifications of transition sleeves and easy to install.
- 12 Stator leads can be reconnect to meet different voltage re quire ments.
- Standard H insulation class.
- Standard 2/3 pitch winding.
- Fully sealed and maintenance-free bearings

Optional Parts:

- Winding temperature test RTD
- Winding Temperature Protection Thermistors & Relays
- Anti-condensation heater
- Air filter
- Parallel operation of the droop
- current transformer
- Auxiliary winding excitation system.
- PMG excitation system.

FLD274J-K SERIES	Three-phase H class temperature rise 125° C						
VOLTAGE	50Hz/1500Rpm			60Hz/1800Rpm			
STAR(Y)-SERIES	380	400	415	416	440	460	480
STAR(Y)-PARALLEL	190	200	208	208	220	230	240
DELTA(△)-SERIES	220	230	240	240	254	266	277
FLD274J Rated capacity (KVA)	230.0	230.0	230.0	269.0	281.0	281.0	300.0
Rated Power (KW)	184.0	184.0	184.0	215.2	224.8	224.8	240.0
Efficiency (%)	92.6	92.7	92.8	92.8	92.9	93.0	93.1
FLD274K Rated capacity (KVA)	250.0	250.0	250.0	290.0	300.0	312.5	312.5
Rated Power (KW)	200.0	200.0	200.0	232.0	240.0	250.0	250.0
Efficiency (%)	92.7	92.8	92.9	93.0	93.2	93.3	93.4

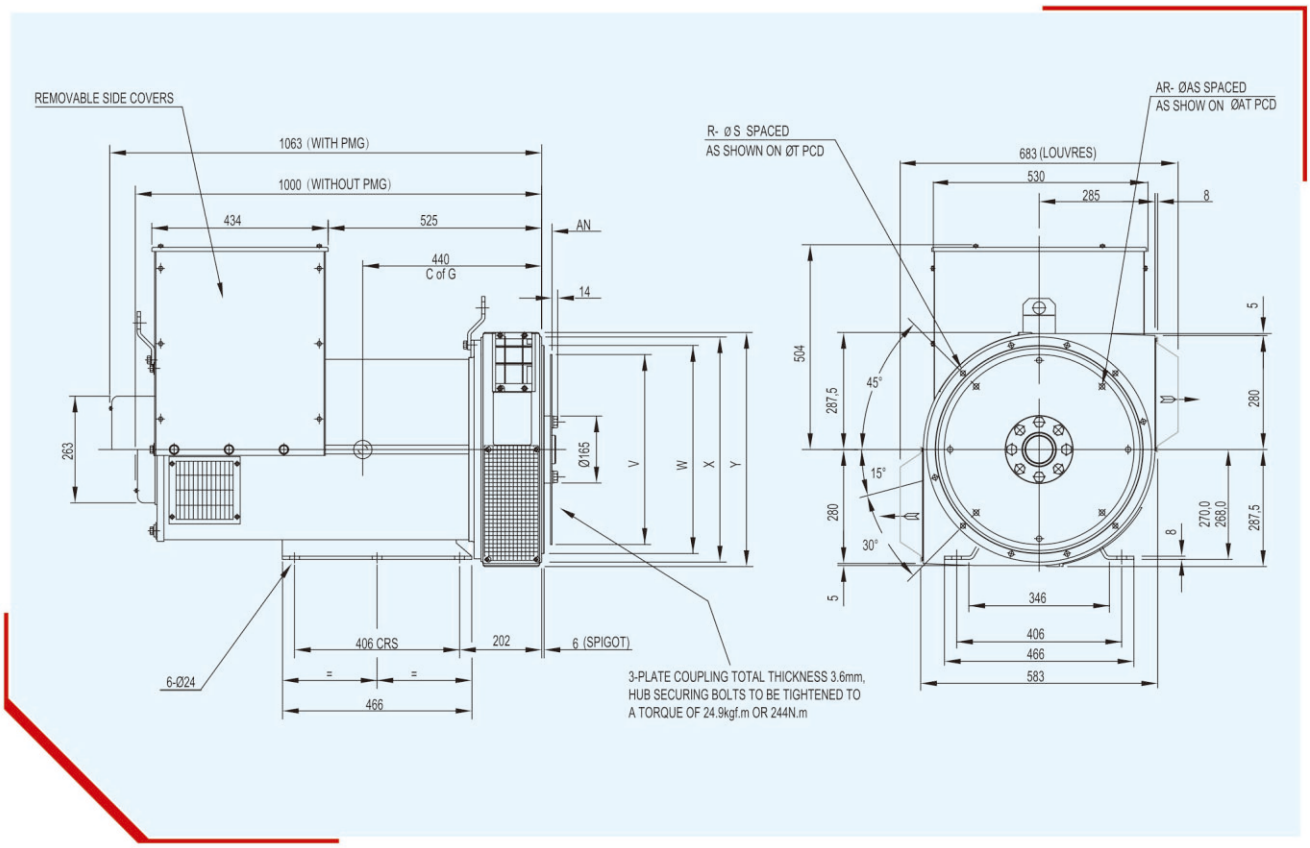

FLANGE ADAPTOR						
SAE NO.	R	S	T	W	X	Y
1	10	12.7	530.2	511.1	553	575
2	10	11	466.7	447.6	489	575

COUPLING DISC					
SAE NO.	AN	AR	AS	AT	V
11.5	39.68	8	11	333.3	352.35
14	25.4	8	13.5	438.2	466.67

SHIPPING DETAILS			
TYPE	N.W(kg)	G.W(kg)	PACKING SIZE(cm)
FLD274J	720	760	117X64X99
FLD274K	740	780	117X64X99

⊙ All drawing and weight data are for reference,please contact Farrand Company if any doubt

FLD 444

Standard Features:

- Meets the world's leading generator standard requirements GB755, IEC60034, BS5000, VDE0530, CSA22.2-100
- Single and double fulcrums are optional, single fulcrum can be selected for various specifications of transition sleeves and easy to install.
- 12 Stator leads can be reconnect to meet different voltage re quire ments.
- Standard H insulation class.
- Standard 2/3 pitch winding.
- Fully sealed and maintenance-free bearings

Optional Parts:

- Winding temperature test RTD
- Winding Temperature Protection Thermistors & Relays
- Anti-condensation heater
- Air filter
- Parallel operation of the droop
- current transformer
- Auxiliary winding excitation system.
- PMG excitation system.

FLD444 SERIES	Three-phase H class temperature rise 125° C						
VOLTAGE	50Hz/1500Rpm			60Hz/1800Rpm			
STAR(Y)-SERIES	380	400	415	416	440	460	480
STAR(Y)-PARALLEL	190	200	208	208	220	230	240
DELTA(△)-SERIES	220	230	240	240	254	266	277
FLD444C Rated capacity (KVA)	250.0	250.0	250.0	285.0	300.0	300.0	313.0
Rated Power (KW)	200.0	200.0	200.0	228.0	240.0	240.0	250.0
Efficiency (%)	92.5	92.8	93.0	92.5	92.7	92.8	93.0
FLD444D Rated capacity (KVA)	300.0	300.0	300.0	338.0	350.0	350.0	375.0
Rated Power (KW)	240.0	240.0	240.0	270.0	280.0	280.0	300.0
Efficiency (%)	92.7	93.0	93.2	92.8	92.9	93.0	93.2
FLD444E Rated capacity (KVA)	350.0	350.0	350.0	400.0	420.0	430.0	440.0
Rated Power (KW)	280.0	280.0	280.0	320.0	336.0	344.0	352.0
Efficiency (%)	93.3	93.6	93.6	93.3	93.5	93.5	93.7
FLD444F Rated capacity (KVA)	400.0	400.0	400.0	455.0	480.0	490.0	500.0
Rated Power (KW)	320.0	320.0	320.0	364.0	384.0	392.0	400.0
Efficiency (%)	93.2	93.4	93.6	93.4	93.5	93.6	93.7

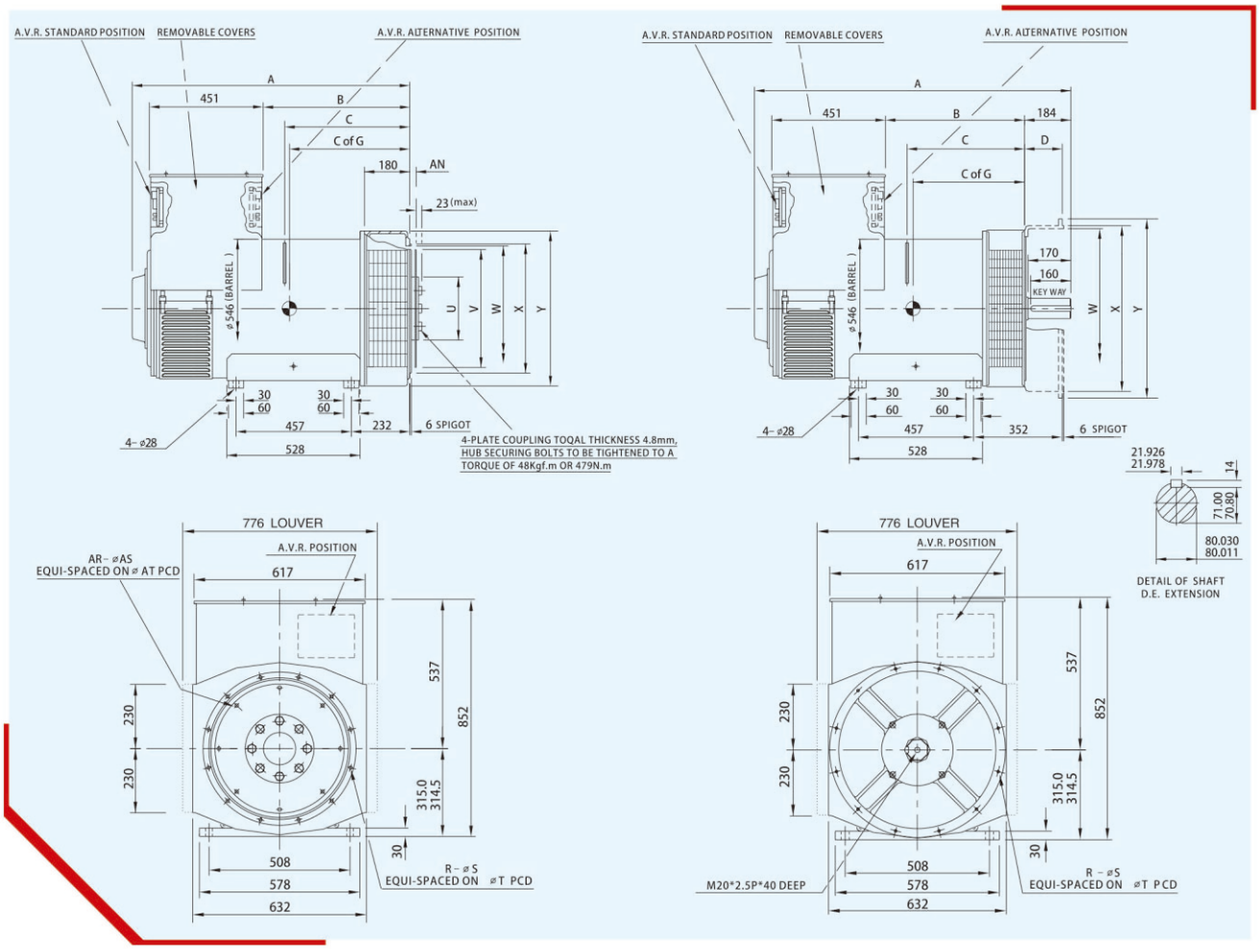

SINGLE BEARING SUPPORTING

DIMENSION				
TYPE	A	B	C	C OF G
FLD444C	1101	584	493	463
FLD444D	1101	584	493	483
FLD444E	1101	584	493	504
FLD444F	1191	674	583	530

COUPLING DISC						
SAE NO.	AN	AR	AS	AT	U	V
11.5	39.68	8	11	333.3	250	352.3
14	25.4	8	13.5	438.1	250	466.6
18	15.87	6	16.7	543.0	250	571.4

FLANGE ADAPTOR						
SAE NO.	R	S	T	W	X	Y
0	12	14	679.5	626	647.6	711
1/2	12	14	619.1	569	584.1	680
1	12	12.7	530.2	496	511.1	617
2	12	11	466.7	432	447.6	617
3	12	11	428.6	394	409.5	617

SHIPPING DETAILS			
TYPE	N.W(kg)	G.W(kg)	PACKING SIZE(cm)
FLD444C	850	910	120X70X105
FLD444D	915	975	120X70X105
FLD444E	1000	1055	120X70X105
FLD444F	1125	1180	130X70X105

DOUBLE BEARING SUPPORTING

DIMENSION				
TYPE	A	B	C	C OF G
FLD444C	1255	554	463	433
FLD444D	1255	554	463	453
FLD444E	1255	554	463	474
FLD444F	1345	644	553	500

FLANGE ADAPTOR							
SAE NO.	R	S	T	D	W	X	Y
0	16	14	679.5	150	632	647.6	711
1/2	12	14	619.1	150	569	584.1	648
1	12	12.7	530.2	150	496	511.1	553
12V135	12	14	625	158	590	604.9	660

SHIPPING DETAILS			
TYPE	N.W(kg)	G.W(kg)	PACKING SIZE(cm)
FLD444C	850	910	130X70X105
FLD444D	915	975	130X70X105
FLD444E	1000	1055	130X70X105
FLD444F	1125	1180	140X70X105

- All drawing and weight data are for reference,please contact Farrand Company if any doubt

FLD 544

Standard Features:

- Meets the world's leading generator standard requirements GB755, IEC60034, BS5000, VDE0530, CSA22.2-100
- Single and double fulcrums are optional, single fulcrum can be selected for various specifications of transition sleeves and easy to install.
- 12 Stator leads can be reconnect to meet different voltage re quire ments.
- Standard H insulation class.
- Standard 2/3 pitch winding.
- Fully sealed and maintenance-free bearings

Optional Parts:

- Winding temperature test RTD
- Winding Temperature Protection Thermistors & Relays
- Anti-condensation heater
- Air filter
- Parallel operation of the droop
- current transformer
- Auxiliary winding excitation system.
- PMG excitation system.

FLD544 SERIES	Three-phase H class temperature rise 125° C						
VOLTAGE	50Hz/1500Rpm			60Hz/1800Rpm			
STAR(Y)-SERIES	380	400	415	416	440	460	480
STAR(Y)-PARALLEL	190	200	208	208	220	230	240
DELTA(△)-SERIES	220	230	240	240	254	266	277
FLD544C Rated capacity (KVA)	450.0	450.0	450.0	525.0	550.0	550.0	575.0
Rated Power (KW)	360.0	360.0	360.0	420.0	440.0	440.0	460.0
Efficiency (%)	93.9	94.0	94.2	93.9	94.0	94.1	94.2
FLD544D Rated capacity (KVA)	500.0	500.0	500.0	575.0	625.0	625.0	645.0
Rated Power (KW)	400.0	400.0	400.0	460.0	500.0	500.0	516.0
Efficiency (%)	94.5	94.6	94.8	94.6	94.7	94.7	94.8
FLD544E Rated capacity (KVA)	600.0	600.0	600.0	681.0	725.0	725.0	750.0
Rated Power (KW)	480.0	480.0	480.0	545.0	580.0	580.0	600.0
Efficiency (%)	94.8	95.0	95.1	94.8	94.9	95.0	95.1
FLD544F Rated capacity (KVA)	675.0	675.0	675.0	738.0	775.0	800.0	825.0
Rated Power (KW)	540.0	540.0	540.0	590.0	620.0	640.0	660.0
Efficiency (%)	94.9	95.0	95.2	95.0	95.0	95.1	95.2

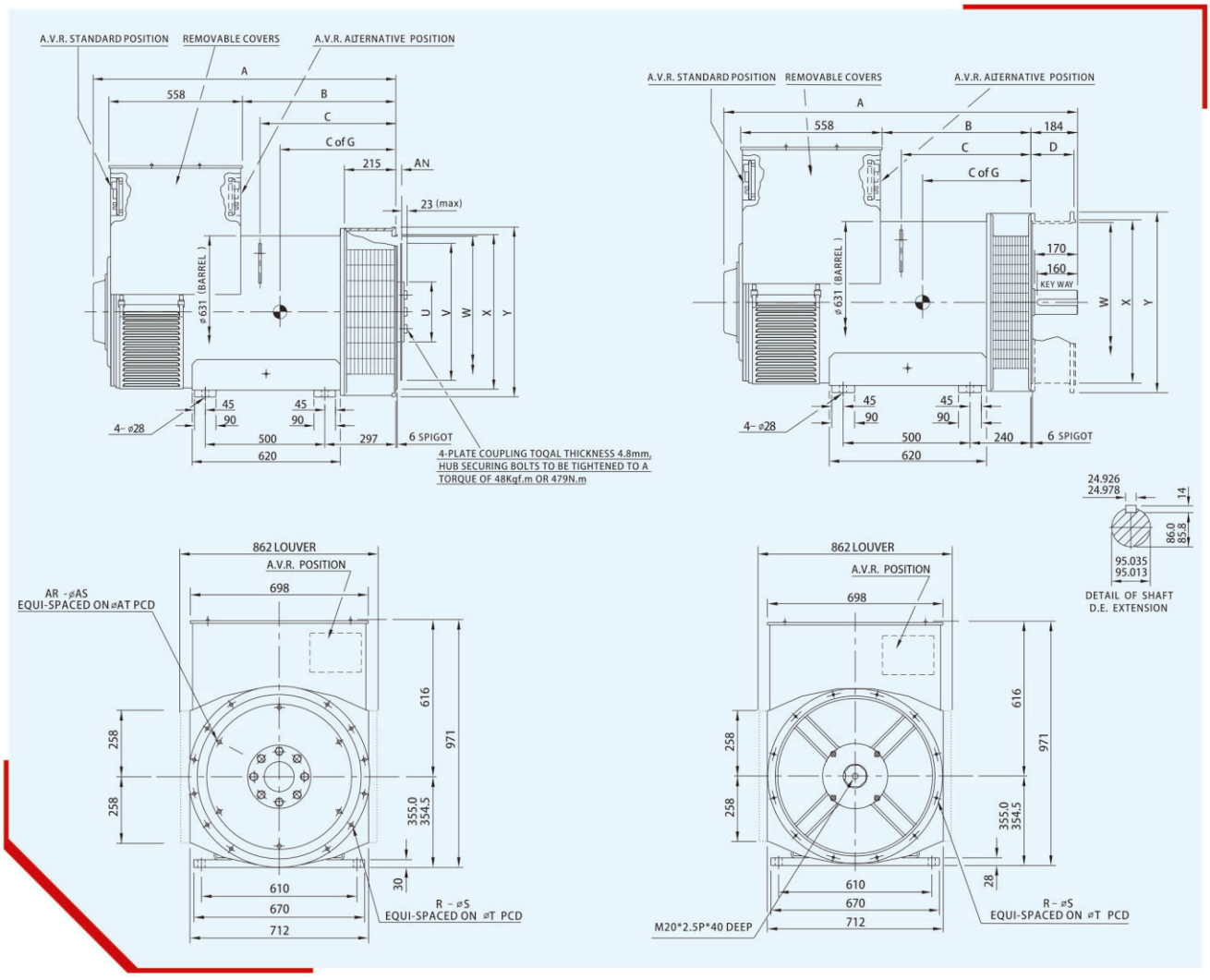

SINGLE BEARING SUPPORTING

DIMENSION				
TYPE	A	B	C	C OF G
FLD544C				555
FLD544D	1266	642	568	575
FLD544E				595
FLD544F	1341	717	643	620

COUPLING DISC						
SAE NO.	AN	AR	AS	AT	U	V
14	25.4	8	13.5	438.1	250	466.6
18	15.87	6	16.7	543	250	571.4
21	0	12	16.7	641.3	250	673

FLANGE ADAPTOR						
SAE NO.	R	S	T	W	X	Y
00	12	14	850.9	772	787.3	882
0	12	14	679.5	632	647.6	711
1/2	12	14	619.1	568	584.1	700
1	12	12.7	530.2	496	511.1	700

SHIPPING DETAILS			
TYPE	N.W(kg)	G.W(kg)	PACKING SIZE(cm)
FLD544C	1250	1350	135x80x115
FLD544D	1360	1450	135x80x115
FLD544E	1500	1600	135x80x115
FLD544F	1650	1750	150x80x115

DOUBLE BEARING SUPPORTING

DIMENSION				
TYPE	A	B	C	C OF G
FLD544C				498
FLD544D	1393	585	511	518
FLD544E				538
FLD544F	1468	660	586	565

FLANGE ADAPTOR							
SAE NO.	R	S	T	W	X	Y	D
00	16	14	850.9	772	787.3	882	170
0	16	14	679.5	632	647.6	711	150
1/2	12	14	619.1	569	584.1	648	150
1	12	12.7	530.2	496	511.1	553	150
12V135	12	14	625.0	590	604.9	660	158

SHIPPING DETAILS			
TYPE	N.W(kg)	G.W(kg)	PACKING SIZE(cm)
FLD544C	1250	1350	150x80x115
FLD544D	1360	1450	150x80x115
FLD544E	1500	1600	150x80x115
FLD544F	1650	1750	160x80x115

All drawing and weight data are for reference,please contact Farrand Company if any doubt

FLD 634

Standard Features:

- Meets the world's leading generator standard requirements GB755, IEC60034, BS5000, VDE0530, CSA22.2-100
- Single and double fulcrums are optional, single fulcrum can be selected for various specifications of transition sleeves and easy to install.
- Standard H insulation class.
- Standard 2/3 pitch winding.
- Fully sealed and maintenance-free bearings
- Standard PMG permanent magnet excitation system can provide continuous section current capability and improve starting performance.

Optional Parts:

- Winding temperature test RTD
- Winding Temperature Protection Thermistors & Relays
- Anti-condensation heater
- Air filter
- Parallel operation of the droop

FLD634 SERIES		Three-phase H class temperature rise 125° C						
VOLTAGE		50Hz/1500Rpm			60Hz/1800Rpm			
STAR(Y)-PARALLEL		380	400	415	416	440	460	480
DELTA(△)-PARALLEL		220	230	240	240	254	266	277
FLD634B	Rated capacity (KVA)	710.0	750.0	750.0	810.0	855.0	895.0	938.0
	Rated Power (KW)	568.0	600.0	600.0	648.0	684.0	716.0	750.0
	Efficiency (%)	93.4	93.5	93.6	93.5	93.6	93.6	93.7
FLD634C	Rated capacity (KVA)	763.0	800.0	800.0	865.0	920.0	960.0	1000.0
	Rated Power (KW)	610.0	640.0	640.0	692.0	736.0	768.0	800.0
	Efficiency (%)	93.6	93.7	93.8	93.6	93.7	93.8	93.9
FLD634D	Rated capacity (KVA)	875.0	910.0	910.0	988.0	1034.0	1090.0	1125.0
	Rated Power (KW)	700.0	728.0	728.0	790.0	827.0	872.0	900.0
	Efficiency (%)	93.8	94.0	94.1	93.8	93.9	94.1	94.2
FLD634E	Rated capacity (KVA)	950.0	1000.0	1000.0	1088.0	1145.0	1190.0	1225.0
	Rated Power (KW)	760.0	800.0	800.0	870.0	916.0	952.0	980.0
	Efficiency (%)	94.2	94.4	94.5	94.2	94.3	94.4	94.4
FLD634F	Rated capacity (KVA)	1075.0	1125.0	1125.0	1212.0	1275.0	1313.0	1350.0
	Rated Power (KW)	860.0	900.0	900.0	970.0	1020.0	1050.0	1080.0
	Efficiency (%)	94.6	94.7	94.8	94.6	94.7	94.8	94.8
FLD634G	Rated capacity (KVA)	1200.0	1250.0	1250.0	1313.0	1375.0	1450.0	1500.0
	Rated Power (KW)	960.0	1000.0	1000.0	1050.0	1100.0	1160.0	1200.0
	Efficiency (%)	94.8	94.9	95.0	94.9	95.0	95.1	95.2

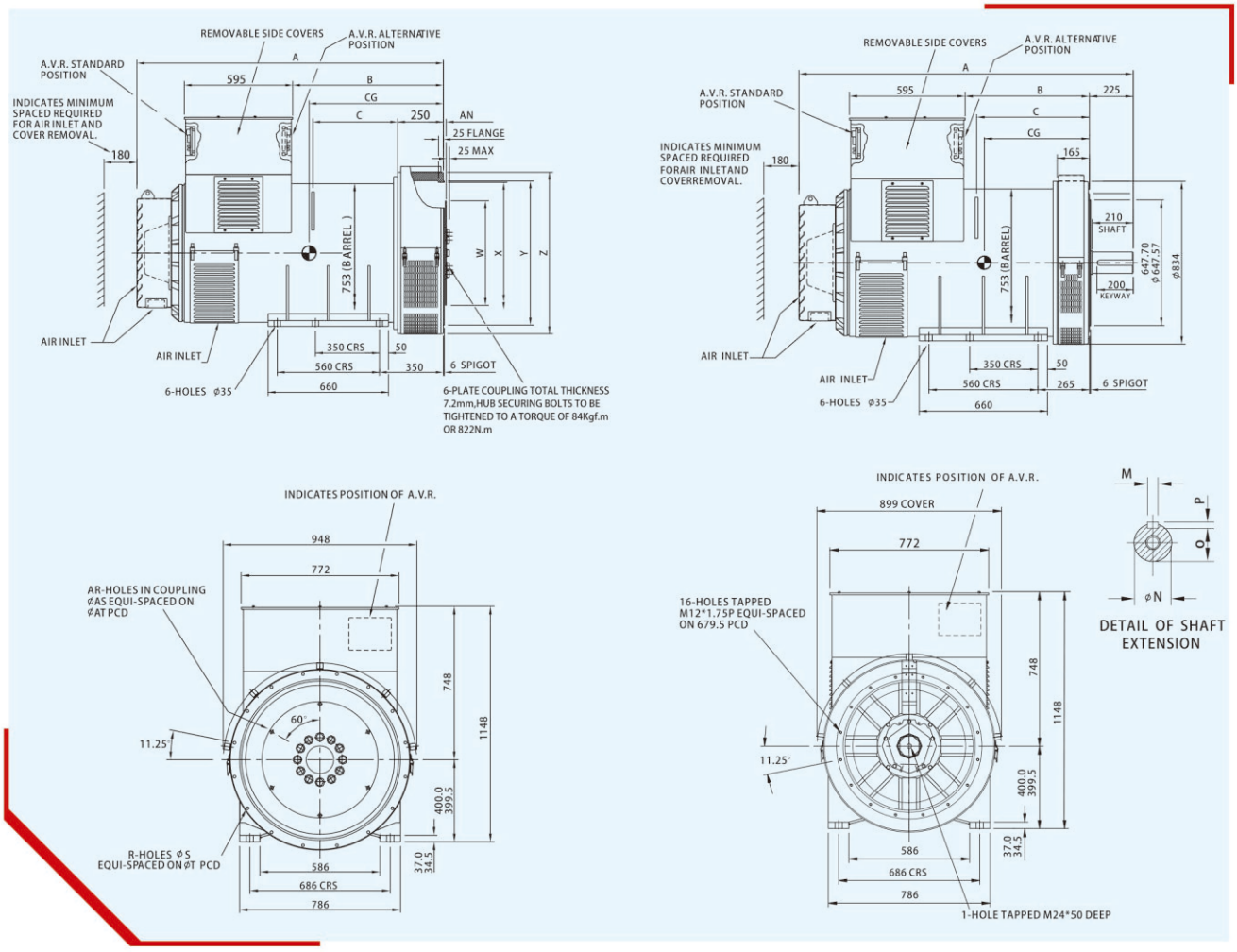

SINGLE BEARING SUPPORTING

DIMENSION				
TYPE	A	B	C	CG
FLD634B				587
FLD634C				591
FLD634D	1578	726	405	597
FLD634E				607
FLD634F				625
FLD634G	1679	826	464	735

COUPLING DISC					
SAE NO.	AN	AR	AS	AT	W
14	25.4	8	13.5	438.1	466.64
18	15.87	6	16.7	543	571.42
21	0	12	16.7	641.3	673.02
24	0	12	20.7	692	733.3

FLANGE ADAPTOR						
SAE NO.	R	S	T	X	Y	Z
00	16	14	851	772	787.3	883
0	16	14	679.5	632	647.6	810
1/2	16	14	619.1	559	584.1	810

SHIPPING DETAILS			
TYPE	N.W(kg)	G.W(kg)	PACKING SIZE(cm)
FLD634B	1950	2020	170x90x145
FLD634C	1970	2040	170x90x145
FLD634D	2030	2100	170x90x145
FLD634E	2190	2260	170x90x145
FLD634F	2420	2490	170x90x145
FLD634G	2750	2820	180x100x145

DOUBLE BEARING SUPPORTING

DIMENSION				
TYPE	A	B	C	CG
FLD634B				587
FLD634C				591
FLD634D	1718	640	570	597
FLD634E				607
FLD634F				625
FLD634G	1904	826	716	735

SHAFT EXTENSION				
TYPE	M	N	O	P
FLD634B/C/D/E/F	27.978 27.926	110.035 110.013	100 99.8	16
FLD634G	31.974 31.912	125.04 125.015	114 113.8	18

SHIPPING DETAILS			
TYPE	N.W(kg)	G.W(kg)	PACKING SIZE(cm)
FLD634B	1960	2030	180x90x135
FLD634C	1980	2050	180x90x135
FLD634D	2040	2110	180x90x135
FLD634E	2210	2280	180x90x135
FLD634F	2430	2500	180x90x135
FLD634G	2760	2830	200x95x135

All drawing and weight data are for reference,please contact Farrand Company if any doubt

FLD 734

Standard Features:

- Meets the world's leading generator standard requirements GB755, IEC60034, BS5000, VDE0530, CSA22.2-100
- Single and double fulcrums are optional, single fulcrum can be selected for various specifications of transition sleeves and easy to install.
- Standard H insulation class.
- Standard 2/3 pitch winding.
- Fully sealed and maintenance-free bearings
- Standard PMG permanent magnet excitation system can provide continuous section current capability and improve starting performance.

Optional Parts:

- Winding temperature test RTD
- Winding Temperature Protection Thermistors & Relays
- Anti-condensation heater
- Air filter
- Parallel operation of the droop

FLD734 SERIES		Three-phase H class temperature rise 125° C					
VOLTAGE		50Hz/1500Rpm			60Hz/1800Rpm		
STAR(Y)-PARALLEL		380	400	415	440	460	480
DELTA(△)-PARALLEL		220	230	240	254	266	277
FLD734A	Rated capacity (KVA)	1325.0	1400.0	1450.0	1550.0	1620.0	1690.0
	Rated Power (KW)	1060.0	1120.0	1160.0	1240.0	1296.0	1352.0
	Efficiency (%)	95.2	95.3	95.4	95.3	95.4	95.5
FLD734B	Rated capacity (KVA)	1485.0	1563.0	1620.0	1750.0	1825.0	1900.0
	Rated Power (KW)	1188.0	1250.0	1296.0	1400.0	1460.0	1520.0
	Efficiency (%)	95.6	95.7	95.8	95.7	95.8	95.9
FLD734C	Rated capacity (KVA)	1600.0	1688.0	1750.0	1850.0	1940.0	2025.0
	Rated Power (KW)	1280.0	1350.0	1400.0	1480.0	1552.0	1620.0
	Efficiency (%)	96.1	96.2	96.3	96.1	96.2	96.3
FLD734D	Rated capacity (KVA)	1800.0	1900.0	1970.0	2100.0	2200.0	2300.0
	Rated Power (KW)	1440.0	1520.0	1576.0	1680.0	1760.0	1840.0
	Efficiency (%)	96.1	96.2	96.3	96.2	96.3	96.4
FLD734E	Rated capacity (KVA)	1960.0	2063.0	2140.0	2363.0	2470.0	2575.0
	Rated Power (KW)	1568.0	1650.0	1712.0	1890.0	1976.0	2060.0
	Efficiency (%)	96.3	96.4	96.5	96.3	96.4	96.5
FLD734F	Rated capacity (KVA)	2140.0	2250.0	2338.0	2520.0	2635.0	2750.0
	Rated Power (KW)	1712.0	1800.0	1870.0	2016.0	2108.0	2200.0
	Efficiency (%)	95.9	96.0	96.1	95.9	96.0	96.1
FLD734G	Rated capacity (KVA)	2375.0	2500.0	2594.0	2625.0	2750.0	2875.0
	Rated Power (KW)	1900.0	2000.0	2075.0	2100.0	2200.0	2300.0
	Efficiency (%)	96.1	96.2	96.3	96.2	96.3	96.4

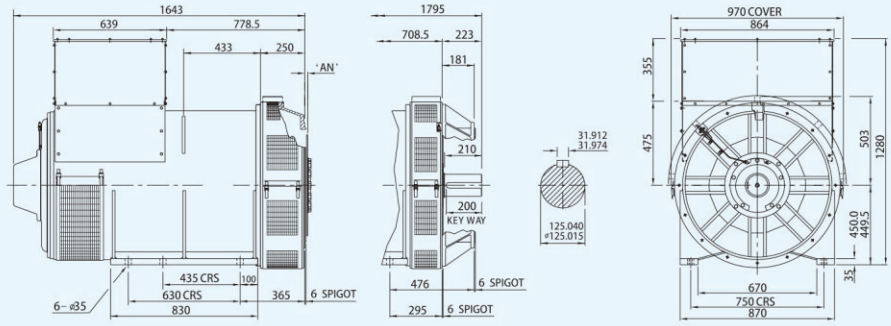

FLD734A&B

COUPLING DISC	AN
SAE NO.18	15.7
SAE NO.21	0
SAE NO.24	0

SINGLE-BEARING ADAPTOR
SAE NO.0
SAE NO.00

DOUBLE-BEARING ADAPTOR
SAE NO.0
SAE NO.00

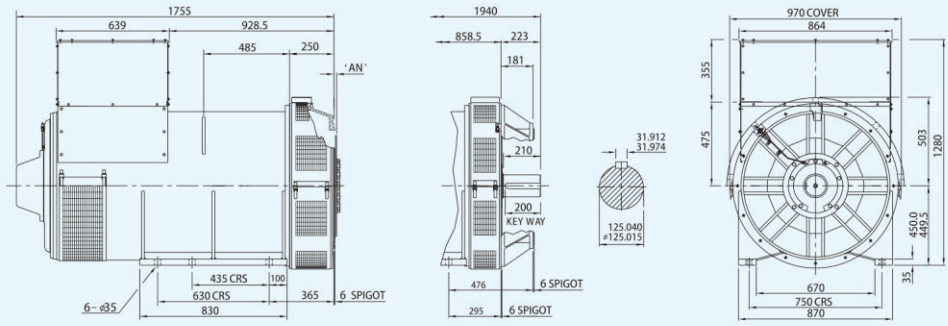

FLD734C&D

COUPLING DISC	AN
SAE NO.18	15.7
SAE NO.21	0
SAE NO.24	0

SINGLE-BEARING ADAPTOR
SAE NO.0
SAE NO.00

DOUBLE-BEARING ADAPTOR
SAE NO.0
SAE NO.00

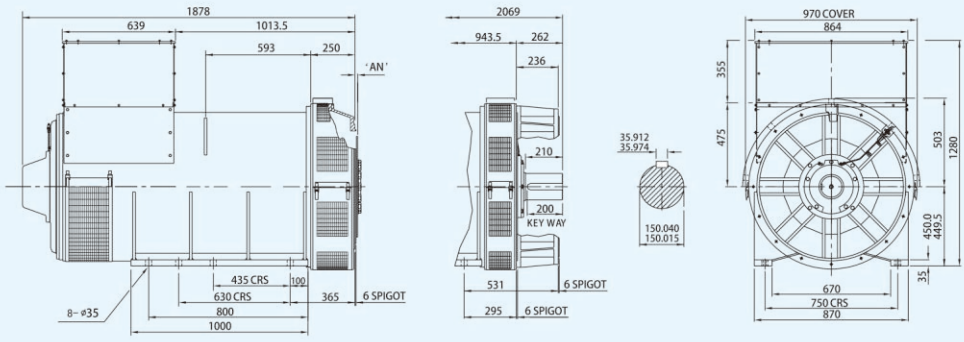

FLD734E&F

COUPLING DISC	AN
SAE NO.18	15.7
SAE NO.21	0
SAE NO.24	0

SINGLE-BEARING ADAPTOR
SAE NO.0
SAE NO.00

DOUBLE-BEARING ADAPTOR
SAE NO.0
SAE NO.00

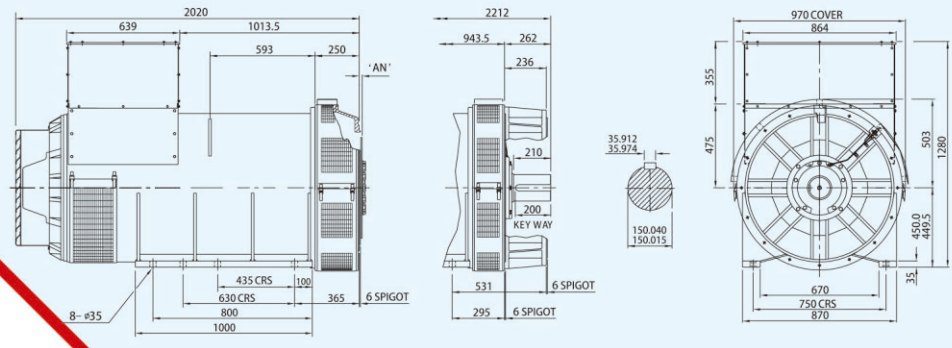

FLD734G

COUPLING DISC	AN
SAE NO.18	15.7
SAE NO.21	0
SAE NO.24	0

SINGLE-BEARING ADAPTOR
SAE NO.0
SAE NO.00

DOUBLE-BEARING ADAPTOR
SAE NO.0
SAE NO.00

SHIPPING DETAILS				
TYPE	SINGLE BEARING		DOUBLE BEARING	
	N.W(kg)	G.W(kg)	N.W(kg)	G.W(kg)
FLD734A	2760	2830	2710	2780
FLD734B	3020	3090	2970	3040
FLD734C	3320	3390	3270	3340
FLD734D	3560	3630	3510	3580
FLD734E	3840	3910	3820	3890
FLD734F	4060	4130	4020	4090
FLD734G	4760	4820	4720	4810

⊙ All drawing and weight data are for reference,please contact Farrand Company if any doubt

Marine Use Alternator Power Range

Three-phase H class temperature rise(110K)								
Speed		50Hz 1500rpm			60Hz 1800rpm			
Voltage	STAR(Y)-SERIES	380	400	415	416	440	460	480
	STAR(Y)-PARALLEL	190	200	208	208	220	230	240
	DELTA(△)-SERIES	220	230	240	240	254	266	277
	DELTA(△)-PARALLE	110	115	120	120	127	133	138
FLDM 184E	Rated Capacity(KVA)	16.3	16.3	16.3	20	21.3	21.3	21.3
	Rated Power(KW)	13.0	13.0	13.0	16.0	17.0	17.0	17.0
	Efficiency(%)	84.4	84.8	85	85.2	85.5	85.9	86.3
FLDM 184F	Rated Capacity(KVA)	21.3	21.3	21.3	25	27	27	27
	Rated Power(KW)	17.0	17.0	17.0	20.0	21.6	21.6	21.6
	Efficiency(%)	85.4	85.7	86	86.4	86.9	87.2	87.5
FLDM 184G	Rated Capacity(KVA)	25	25	25	28	30	30	30
	Rated Power(KW)	20	20	20	22.4	24	24	24
	Efficiency(%)	86.8	87.2	87.5	87.6	87.9	88.3	88.6
FLDM 184H	Rated Capacity(KVA)	32.5	32.5	32.5	37.5	40	40	40
	Rated Power(KW)	26	26	26	30	32	32	32
	Efficiency(%)	87.3	87.7	88	87.9	88.2	88.6	88.9
FLDM 184J	Rated Capacity(KVA)	35	35	35	40	42.5	42.5	42.5
	Rated Power(KW)	28	28	28	32	34	34	34
	Efficiency(%)	87.5	87.9	88.2	88.1	88.4	88.8	89.1
FLDM 224C	Rated Capacity(KVA)	37.5	37.5	37.5	43.8	45.0	45.0	46.5
	Rated Power(KW)	30.0	30.0	30.0	35.0	36.0	36.0	37.2
	Efficiency(%)	87.5	87.7	87.9	88.1	88.3	88.5	88.8
FLDM 224D	Rated Capacity(KVA)	45.0	45.0	45.0	51.3	53.1	53.1	56.3
	Rated Power(KW)	36.0	36.0	36.0	41.0	42.5	42.5	45.0
	Efficiency(%)	88.5	88.9	89.3	89.2	89.6	90.1	90.4
FLDM 224E	Rated Capacity(KVA)	52.5	52.5	52.5	60.0	62.5	62.5	65.0
	Rated Power(KW)	42.0	42.0	42.0	48.0	50.0	50.0	52.0
	Efficiency(%)	88.9	89.4	89.6	89.2	89.6	90.1	90.4
FLDM 224F	Rated Capacity(KVA)	62.5	62.5	62.5	72.5	75.0	75.0	80.0
	Rated Power(KW)	50.0	50.0	50.0	58.0	60.0	60.0	64.0
	Efficiency(%)	89.2	89.6	90.1	90.2	90.3	90.4	90.6
FLDM 224G	Rated Capacity(KVA)	72.5	72.5	72.6	85.0	87.5	87.5	91.3
	Rated Power(KW)	58.0	58.0	58.0	68.0	70.0	70.0	73.0
	Efficiency(%)	89.4	90.0	90.3	90.5	90.6	90.6	90.9
FLDM 274C	Rated Capacity(KVA)	81.3	81.3	81.3	93.8	102.5	102.5	107.5
	Rated Power(KW)	65.0	65.0	65.0	75	82	82	86
	Efficiency(%)	88.3	88.7	89.1	88.8	89.1	89.5	89.8
FLDM 274D	Rated Capacity(KVA)	93.8	93.8	93.8	107.5	115	115	120
	Rated Power(KW)	75.0	75.0	75.0	86	92	92	96
	Efficiency(%)	88.9	89.3	89.6	89.3	89.7	90.1	90.3
FLDM 274DL	Rated Capacity(KVA)	100.0	100.0	100.0	120	125	125	130
	Rated Power(KW)	80.0	80.0	80.0	96	100	100	104
	Efficiency(%)	90.2	90.6	90.8	90.5	90.9	91.2	91.4

Marine Use Alternator Power Range

Three-phase H class temperature rise(110K)								
Speed		50Hz 1500rpm			60Hz 1800rpm			
电压(V)	STAR(Y)-SERIES	380	400	415	416	440	460	480
	STAR(Y)-PARALLEL	190	200	208	208	220	230	240
	DELTA(△)-SERIES	220	230	240	240	254	266	277
	DELTA(△)-PARALLE	110	115	120	120	127	133	139
FLDM 274E	Rated Capacity(KVA)	120.0	120.0	120.0	135	137.5	137.5	142.5
	Rated Power(KW)	96.0	96.0	96.0	108	110	110	114
	Efficiency(%)	90.3	90.7	91.0	90.8	91	91.4	91.6
FLDM 274F	Rated Capacity(KVA)	140.0	140.0	140.0	156.3	162.5	162.5	168.8
	Rated Power(KW)	112.0	112.0	112.0	125	130	130	135
	Efficiency(%)	90.9	91.2	91.4	91.2	91.5	91.8	92
FLDM 274G	Rated Capacity(KVA)	160.0	160.0	160.0	180	187.5	187.5	200
	Rated Power(KW)	128.0	128.0	128.0	144	150	150	160
	Efficiency(%)	91.9	92.2	92.4	92.3	92.5	92.7	92.9
FLDM 274H	Rated Capacity(KVA)	175.0	175.0	175.0	200	218.8	218.8	225
	Rated Power(KW)	140.0	140.0	140.0	160	175	175	180
	Efficiency(%)	92.1	92.3	92.5	92.4	92.6	92.8	93
FLDM 274K	Rated Capacity(KVA)	200.0	200.0	200.0	235	245	245	255
	Rated Power(KW)	160.0	160.0	160.0	188	196	196	204
	Efficiency(%)	92.4	92.6	92.8		93	93.2	93.3
FLDM 444C	Rated Capacity(KVA)	225	225	225	245	260	260	275
	Rated Power(KW)	180	180	180	196	208	208	220
	Efficiency(%)	92.2	92.6	92.9	92.6	92.9	93.2	93.3
FLDM 444D	Rated Capacity(KVA)	250	250	250	275	300	300	315
	Rated Power(KW)	200	200	200	220	240	240	252
	Efficiency(%)	92.7	92.9	93.2	92.9	93.1	93.4	93.5
FLDM 444E	Rated Capacity(KVA)	312.5	312.5	312.5	350	375	375	400
	Rated Power(KW)	250	250	250	280	300	300	320
	Efficiency(%)	93.3	93.5	93.8	93.5	93.7	94	94.1
FLDM 444F	Rated Capacity(KVA)	350	350	350	400	425	425	450
	Rated Power(KW)	280	280	280	320	340	340	360
	Efficiency(%)	93.5	93.7	93.9	93.6	93.9	94.1	94.2
FLDM 544C	Rated Capacity(KVA)	400	400	400	450	460	470	480
	Rated Power(KW)	320	320	320	360	368	376	384
	Efficiency(%)	93.7	94	94.2	93.9	94.2	94.3	94.5
FLDM 544D	Rated Capacity(KVA)	440	440	440	500	525	535	545
	Rated Power(KW)	352	352	352	400	420	428	436
	Efficiency(%)	94.3	94.5	94.7	94.5	94.7	94.8	94.9
FLDM 544E	Rated Capacity(KVA)	540	540	540	600	625	638	650
	Rated Power(KW)	432	432	432	480	500	510	520
	Efficiency(%)	94	95	95	95	95	95	95
FLDM 544F	Rated Capacity(KVA)	600	600	600	675	700	712.5	725
	Rated Power(KW)	480	480	480	540	560	570	580
	Efficiency(%)	94.8	94.9	95	94.9	95.1	95.2	95.3

Marine Use Alternator Power Range

Three-phase H class temperature rise(110K)								
Speed		50Hz 1500rpm			60Hz 1800rpm			
Voltage	STAR(Y)-SERIES	380	400	415	416	440	460	480
	DELTA(△)-PARALLE	220	230	240	240	254	266	277
FLDM634B	Rated Capacity(KVA)	625	650	650	725	750	775	800
	Rated Power(KW)	500	520	520	580	600	620	640
	Efficiency(%)	94.4	94.6	94.7	94.4	94.6	94.8	94.9
FLDM634C	Rated Capacity(KVA)	675	700	725	775	800	825	850
	Rated Power(KW)	540	560	580	620	640	660	680
	Efficiency(%)	94.3	94.5	94.6	94.3	94.6	94.7	94.9
FLDM634D	Rated Capacity(KVA)	750	780	780	850	875	900	925
	Rated Power(KW)	600	624	624	680	700	720	740
	Efficiency(%)	94.6	94.7	94.9	94.6	94.8	95	95.1
FLDM634E	Rated Capacity(KVA)	850	887.5	887.5	975	1000	1025	1050
	Rated Power(KW)	680	710	710	780	800	820	840
	Efficiency(%)	94.9	95	95.1	94.9	95.1	95.2	95.4
FLDM634F	Rated Capacity(KVA)	950	1000	1025	1125	1150	1175	1200
	Rated Power(KW)	760	800	820	900	920	940	960
	Efficiency(%)	95.3	95.4	95.5	95.3	95.4	95.6	95.7
FLDM634G	Rated Capacity(KVA)	1075	1125	1150	1225	1250	1275	1300
	Rated Power(KW)	860	900	920	980	1000	1020	1040
	Efficiency(%)	95.6		95.8	95.7	95.8	95.9	96

High Voltage Alternator Product Model Definition

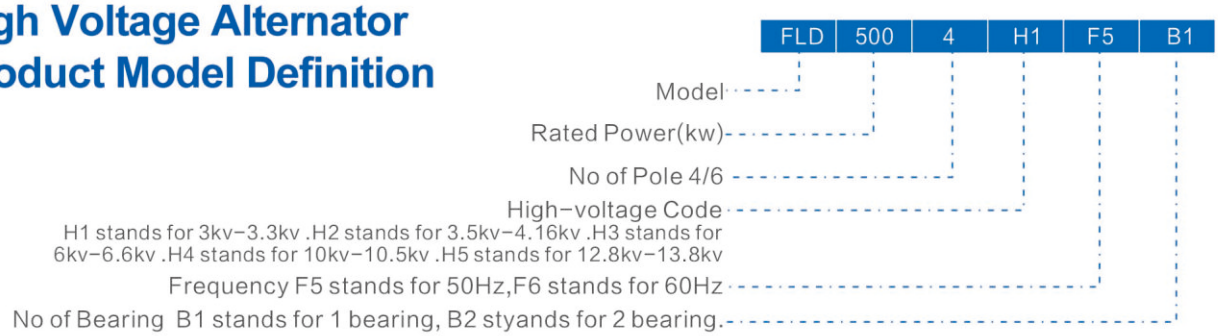

Three-phase High Voltage Alternator Power Range

⊙ Standard Features:

1、Meets the world's leading generator standard requirements GB755, IEC60034, BS5000, VDE0530, CSA22.2-100
2、Single and double fulcrums are optional, single fulcrum can be selected for various specifications of transition sleeves and easy to install.
3、Standard F insulation class.
4、Standard PMG permanent magnet excitation system can provide three times continuous short-circuit current.
5、Standard IP21 protection class.
6、Anti-condensation heater
7、Bearing and Winding temperature test RTD

⊙ Optional Parts:

1. Air filter
2. Parallel operation of the droop
3. Digital AVR optional

Frequency/Speed	50HZ-1500RPM			Frequency/Speed	50HZ-1500RPM			Frequency/Speed	50HZ-1500RPM			Frequency/Speed	50HZ-1500RPM		
STAR CONNECTION Y	10500V			STAR CONNECTION Y	6300V			STAR CONNECTION Y	3300V			STAR CONNECTION Y	13800V		
Temperature Rising	F Class Temperature 105K/40℃			Temperature Rising	F Class Temperature 105K/40℃			Temperature Rising	F Class Temperature 105K/40℃			Temperature Rising	F Class Temperature 105K/40℃		
Model	Rated Capacity KVA	Rated Power KW	Efficiency %	Model	Rated Capacity KVA	Rated Power KW	Efficiency %	Model	Rated Capacity KVA	Rated Power KW	Efficiency %	Model	Rated Capacity KVA	Rated Power KW	Efficiency %
FLD5004H4F5	625	500	93.2	FLD6004H3F5	750	600	94.6	FLD6004H1F5	750	600	94.7	FLD5004H5F6	625	500	92.3
FLD6004H4F5	750	600	93.7	FLD8004H3F5	1000	800	94.9	FLD8004H1F5	1000	800	95	FLD6004H5F6	750	600	92.8
FLD8004H4F5	1000	800	94.2	FLD10004H3F5	1250	1000	95.3	FLD10004H1F5	1250	1000	95.4	FLD8004H5F6	1000	800	93.2
FLD10004H4F5	1250	1000	94.6	FLD12004H3F5	1500	1200	95.7	FLD12004H1F5	1500	1200	95.9	FLD10004H5F6	1250	1000	93.5
FLD12004H4F5	1500	1200	95.1	FLD14004H3F5	1750	1400	95.8	FLD14004H1F5	1750	1400	96	FLD12004H5F6	1500	1200	94.2
FLD14004H4F5	1750	1400	95.5	FLD15004H3F5	1875	1500	95.9	FLD15004H1F5	1875	1500	96.1	FLD14004H5F6	1750	1400	94.6
FLD15004H4F5	1875	1500	95.8	FLD16004H3F5	2000	1600	96	FLD16004H1F5	2000	1600	96.2	FLD15004H5F6	1875	1500	95
FLD16004H4F5	2000	1600	96	FLD18004H3F5	2250	1800	96.1	FLD18004H1F5	2250	1800	96.2	FLD16004H5F6	2000	1600	95.2
FLD18004H4F5	2250	1800	96.1	FLD20004H3F5	2500	2000	96.2	FLD20004H1F5	2500	2000	96.3				
FLD20004H4F5	2500	2000	96.2	FLD22004H3F5	2750	2200	96.3	FLD22004H1F5	2750	2200	96.3				
FLD22004H4F5	2750	2200	96.3	FLD24004H3F5	3000	2400	96.3	FLD24004H1F5	3000	2400	96.4				
				FLD26004H3F5	3250	2600	96.4	FLD26004H1F5	3250	2600	96.5				
								FLD28004H1F5	3500	2800	96.6				

Frequency/Speed	60HZ-1800RPM			Frequency/Speed	60HZ-1800RPM			Frequency/Speed	60HZ-1800RPM			Frequency/Speed	60HZ-1800RPM		
STAR CONNECTION Y	10500V			STAR CONNECTION Y	6600V			STAR CONNECTION Y	4160V			STAR CONNECTION Y	3300V		
Temperature Rising	F Class Temperature 105K/40℃			Temperature Rising	F Class Temperature 105K/40℃			Temperature Rising	F Class Temperature 105K/40℃			Temperature Rising	F Class Temperature 105K/40℃		
Model	Rated Capacity KVA	Rated Power KW	Efficiency %	Model	Rated Capacity KVA	Rated Power KW	Efficiency %	Model	Rated Capacity KVA	Rated Power KW	Efficiency %	Model	Rated Capacity KVA	Rated Power KW	Efficiency %
FLD6004H4F6	750	600	93.4	FLD6004H3F6	750	600	94	FLD6004H2F6	750	600	94.2	FLD6004H1F6	750	600	94.4
FLD8004H4F6	1000	800	93.7	FLD8004H3F6	1000	800	94.5	FLD8004H2F6	1000	800	94.6	FLD8004H1F6	1000	800	94.8
FLD10004H4F6	1250	1000	94	FLD10004H3F6	1250	1000	95.1	FLD10004H2F6	1250	1000	95	FLD10004H1F6	1250	1000	95.2
FLD12004H4F6	1500	1200	94.5	FLD12004H3F6	1500	1200	95.5	FLD12004H2F6	1500	1200	95.4	FLD12004H1F6	1500	1200	95.5
FLD14004H4F6	1750	1400	94.8	FLD14004H3F6	1750	1400	95.6	FLD14004H2F6	1750	1400	95.5	FLD14004H1F6	1750	1400	95.7
FLD16004H4F6	2000	1600	95.4	FLD16004H3F6	2000	1600	95.8	FLD16004H2F6	2000	1600	95.8	FLD16004H1F6	2000	1600	96
FLD18004H4F6	2250	1800	95.6	FLD18004H3F6	2250	1800	95.9	FLD18004H2F6	2250	1800	95.9	FLD18004H1F6	2250	1800	96.1
FLD20004H4F6	2500	2000	95.8	FLD20004H3F6	2500	2000	96	FLD20004H2F6	2500	2000	96	FLD20004H1F6	2500	2000	96.2
FLD22004H4F6	2750	2200	96	FLD22004H3F6	2500	2200	96.2	FLD22004H2F6	2750	2200	96.1	FLD22004H1F6	2750	2200	96.3
				FLD24004H3F6	3000	2400	96.2	FLD24004H2F6	3000	2400	96.2	FLD24004H1F6	3000	2400	96.4
								FLD26004H2F6	3250	2600	96.3	FLD26004H1F6	3250	2600	96.5
												FLD28004H1F6	3500	2800	96.6

6P 3 Phase Industial Use Alternator Power Range

Standard Features:

- Meets the world's leading generator standard requirements
- Provide continuous short-circuit current capability
- H class insulation ensures the generator runs under harsh conditions
- 2/3 pitch design avoids excessive neutral current
- Single and double fulcrums are optional, single fulcrum can be selected for various specifications of transition sleeves and easy to install.
- Standard IP22 protection class

Optional Parts:

- Winding temperature test RTD
- Bearing temperature test RTD
- Winding Temperature Protection Thermistors& Relays
- Anti-condensation heater
- Air filter
- Parallel operation of the droop
- Anti-radio alarm suppressor
- Power factor controller PFC3

Three-phase H class temperature rise(125K)							
Speed		50Hz 1000rpm			60Hz 1200rpm		
电压(V)	STAR(Y)-PARALLEL	380	400	415	440	460	480
	DELTA(△)-PARALLE	220	230	240	254	266	277
FLD636B	Rated Capacity(KVA)	300	320	320	365	375	400
	Rated Power(KW)	240	256	256	292	300	320
	Efficiency(%)	93.3	93.4	93.5	93.6	93.7	93.8
FLD636C	Rated Capacity(KVA)	375	400	400	455	480	500
	Rated Power(KW)	300	320	320	364	384	400
	Efficiency(%)	93.8	93.9	94	94.1	94.3	94.4
FLD636D	Rated Capacity(KVA)	475	500	500	570	600	625
	Rated Power(KW)	380	400	400	456	480	500
	Efficiency(%)	94.1	94.2	94.3	94.4	94.5	94.5
FLD636E	Rated Capacity(KVA)	590	625	625	685	713	750
	Rated Power(KW)	472	500	500	548	570	600
	Efficiency(%)	94.5	94.6	94.6	94.8	95	95.1
FLD736A	Rated Capacity(KVA)	760	800	800	915	955	1000
	Rated Power(KW)	608	640	640	732	764	800
	Efficiency(%)	94.9	95	95.1	95.1	95.2	95.3
FLD736B	Rated Capacity(KVA)	850	900	900	1030	1075	1125
	Rated Power(KW)	680	720	720	824	860	900
	Efficiency(%)	95	95.1	95.1	95.2	95.3	95.3
FLD736C	Rated Capacity(KVA)	945	1000	1000	1140	1190	1250
	Rated Power(KW)	756	800	800	912	952	1000
	Efficiency(%)	95.2	95.3	95.4	95.4	95.5	95.6
FLD736D	Rated Capacity(KVA)	1188	1250	1250	1370	1438	1500
	Rated Power(KW)	950	1000	1000	1096	1150	1200
	Efficiency(%)	95.4	95.5	95.6	95.7	95.8	95.8

FLD184 refrigerated Alternator series

Used for cold-chain logistics such as refrigerated trailers, refrigerated containers and large fresh food distribution centers

Excitation system:

Brushless exciter, transformer excitation system, with super voltage characteristics

Standard Features:

The main stator provides power to the exciter magnetic field through the transformer rectifier module. The transformer combines the voltage and current output by the main stator to form a self-regulating voltage or voltage switching control system.This system can automatically compensate the excitation current that varies with load or power factor, and has good compressor starting ability and short circuit characteristics.

Highlight advantages:

1.The excitation system changes follows the changed load conditions automatically.
2.Super strong excitation output for reliable operation of refrigerated trucks.

MODEL	THREE-PHASE 60Hz 1800RPM 460V		
	KVA	KW	EFFICIENCY %
FLDR184CL	15.6	12.5	81.5
FLDR184DL	22	17.5	84.3
FLDR184EL	25	20	85.8
FLDR184FL	31.3	25	86.7

≫ Technical Support

Farrand Generator has a professional R & D and manufacturing team with many years of service experience。According to customer needs, we can provide right technical support on pre-sales, in-sales and after-sales.

≫ Warranty

24 months after delivery or 2000 hours of continuous operation (whichever comes first)
For generators used in special fields, the warranty period can be extended accordingly.